Motion Control PMC

more than automation
safe automation

PMCtendo DD5 / PMCprimo Drive3

Installation manual – Item No. 21 590-01

1 General conditions

1.1 Copyright

1.2 Notes

Pilz GmbH & Co. KG reserves the right to make amendments to this document at any time.

The examples given serve only as illustrations. No guarantee is given for their suitability in particular applications. Although the utmost care has been taken in the production of this document, no liability can be accepted for any mistakes that it may contain. We welcome any suggestions for the improvement of our products, or documentation.

We reserve the right to make technical changes, which lead to the improvement of the product!

1.3 Previous editions

Edition	Remark
V1	Initial release

2 Table of contents

3 Type key

3.1 Type PMCtendo DD5

To be included when ordering	Type	Voltage
Order number	PMCtendo DD5 . _ _ / _ _ _	_ _ _ _ _ VAC

230V series	current	Size
	3A	03
	6A	06
	10A	10

480V series	current	Size
	1,5A	01
	3A	03
	6A	06

115...230VAC	230V series
208...480VAC	480V series

			112	116	117	122
Design basic device	Standard with AS-Option		■	■	■	■
slot extension	I/O extension	D1				■
	businterface	Profibus-DP/S			■	

Bus system standard: CANopen

D1 : 14 digital inputs / 8 digital outputs

3.2 Type PMCprimo Drive3

To be included when ordering	Type	Voltage
order number	PMCprimo Drive3 . _ _ / _ _ / _	_ _ _ _ _ VAC

230V series	current	size
	3A	03
	6A	06
	10A	10

480V series	current	size
	1,5A	01
	3A	03
	6A	06

115...230VAC	230V series
208...480VAC	480V series

	11	21	23	25
without	■			
expansion card (1)		■		■
Profibus-DP/S Small (2)			■	■

	2	3	4	5	6	7
without	■					
Motion		■		■		■
Software SPS			■	■	■	■
Interpolation					■	■

Bus systems standard: CANopen, Modbus

(1) Expansion card with:
Compactflash
Ethernet
Second CAN bus
Realtime clock
Battery buffered RAM

(2) In case of an activated Profibus-DP-IC
the Modbus is without function

4 Safety instructions

- **Only properly qualified personnel are permitted to perform activities such as transport, installation, setup and maintenance. Properly qualified persons are those who are familiar with the transport, assembly, installation, setup and operation of the product, and who have the appropriate qualifications for their job. Qualified personnel must know and observe:**
  IEC 364 and CENELEC HD 384 or DIN VDE 0100
  IEC-Report 664 or DIN VDE 0110
  National Accident Prevention Regulations or BGV A3

- **Read this documentation before carrying out installation and setup. Incorrect handling of the servo amplifier can lead to personal injury or material damage. It is vital that you keep to the technical data and information on connection requirements (on the nameplate and in the documentation).**

- **The servo amplifiers contain electrostatically sensitive components that may be damaged by incorrect handling. Ground yourself before touching the servo amplifier, by touching any unpainted metal surface that is itself grounded. Avoid contact with highly insulating materials such as artificial fabrics or plastic film. Place the servo amplifier on a conductive surface.**

- **The manufacturer of the machine must generate a hazard analysis for the machine, and take appropriate measures to ensure that unforeseen movements cannot cause injury or damage to any person or property.**

- **Do not open the units. Keep all covers and control cabinet doors closed during operation. Otherwise there are deadly hazards, with the risk of death, severe danger to health, or material damage.**

- **Servo amplifiers may have uncovered live parts during operation, depending on their degree of enclosure protection. Control and power connections may be live, even when the motor is not rotating.**

- **Servo amplifiers may have hot surfaces during operation. Temperatures may rise to above 80°C (176°F).**

- **Never undo the electrical connections to the servo amplifier while it is live. In unfavorable circumstances this may cause electrical arcing with damage to contacts and danger to persons.**

- **After disconnecting the servo amplifier, wait at least five minutes before touching live sections of the equipment, such as contacts, or undoing any connections. Capacitors can still have dangerous voltages present up to five minutes after switching off the supply voltages. To be sure, measure the voltage in the DC bus link circuit and wait until it has fallen below 40V.**

5 European Directives and Standards

Servo amplifiers are components that are intended to be incorporated into electrical plant and machines for industrial use.

When the servo amplifiers are built into machines or plant, the amplifier must not be used until it has been established that the machine or equipment fulfills the requirements of the EC Machinery Directive (98/37/EC), the EC EMC Directive (89/336/EEC) and the EC Low Voltage Directive 73/23/EEC.

Standards to be applied for conformance with the EC Machinery Directive (98/37/EC):
EN 60204-1 (Safety and Electrical Equipment in Machines)
EN 292 (Safety of Machines)

The manufacturer of the machine must generate a hazard analysis for the machine, and must implement appropriate measures to ensure that unforeseen movements cannot cause injury or damage to any person or property.

Standards to be applied for conformance with the EC Low Voltage Directive (73/23/EEC):
EN 60204-1 (Safety and Electrical Equipment in Machines)
EN 50178 (Electronic Equipment in Power Installations)
EN 60439-1 (Low Voltage Switchgear Combinations)

Standards to be applied for conformance with the EC EMC Directive (89/336/EEC):
EN 61000-6-1 / EN 61000-6-2 (Interference Immunity in Residential & Industrial Areas)
EN 61000-6-3 / EN 61000-6-4 (Interference Generation in Residential & Industrial Areas)

The manufacturer of the machine/plant is responsible for ensuring that it meets the limits required by the EMC regulations. Advice on the correct installation for EMC (such as shielding, grounding, treatment of connectors and cable layout) can be found in this documentation.

The machine/plant manufacturer must check whether other standards or EC Directives must be applied to the machine/plant.

CE conformance

Conformance with the EC EMC Directive 89/336/EEC and the Low Voltage Directive 73/23/EEC is mandatory for the supply of servo amplifiers within the European Community. Product standard EN 61800-3 is applied to ensure conformance with the EMC Directive. The Declaration of Conformity form can be found on our website (download area).

Concerning noise immunity the servo amplifier meets the requirements to the 2nd environmental category (industrial environment). For noise emission the amplifier meets the requirement to a product of the category C2 (motor cable ≤ 10m).

Warning!

This product can cause high-frequency interferences in non industrial environments which can require measures for interference suppression.

With a motor cable length from 10m onwards, the servo amplifier meets the requirement to the category C3.
The servo amplifiers have been tested by an authorized testing laboratory in a defined configuration, using the system components that are described in this documentation. Any divergence from the configuration and installation described in this documentation means that you will be responsible for carrying out new measurements to ensure conformance with regulatory requirements.

The standard EN 50178 is applied to ensure conformance with the Low Voltage Directive.

Conformance with UL and cUL

This servo amplifier is listed under UL file number E306065.

UL (cUL)-certified servo amplifiers (Underwriters Laboratories Inc.) fulfil the relevant U.S. and Canadian standard (in this case UL 840 and UL 508C).

This standard describes the fulfilment by design of minimum requirements for electrically operated power conversion equipment, such as frequency converters and servo amplifiers, which is intended to eliminate the risk of fire, electric shock, or injury to persons, being caused by such equipment. The technical conformance with the U.S. and Canadian standard is determined by an independent UL (cUL) inspector through the type testing and regular checkups.

Apart from the notes on installation and safety in the documentation, the customer does not have to observe any other points in direct connection with the UL (cUL)-certification of the equipment.

UL 508C
UL 508C describes the fulfilment by design of minimum requirements for electrically operated power conversion equipment, such as frequency converters and servo amplifiers, which is intended to eliminate the risk of fire being caused by such equipment.

UL 840
UL 840 describes the fulfilment by design of air and insulation creepage spacings for electrical equipment and printed circuit boards.

6 Abbreviations and symbols

The abbreviations and symbols used in this manual are explained in the table below:

Abbreviation	Meaning
AGND	Analog ground
AS	Restart lock, option
BTB/RTO	Ready to operate
CAN	Fieldbus (CANopen)
CE	Communité Europeenne
CLK	Clock signal
COM	Serial interface for a PC-AT
DGND	Digital ground (for 24V and digital I/O)
DIN	German Institute for Industrial Standards
Disk	Magnetic storage (diskette, hard disk)
EEPROM	Electrically erasable programmable memory
EMC	Electromagnetic compatibility
EMI	Electromagnetic interference
EN	European Standard
ESD	Electrostatic discharge
F-SMA	Fiber Optic Cable connector according to IEC 60874-2
IEC	International Electrotechnical Commission
IGBT	Insulated-gate bipolar transistor
INC	Incremental interface
ISO	International Organization for Standardization
LED	Light-emitting diode
MB	Megabyte
NI	Zero pulse
PC	Personal computer
PELV	Protected low voltage
PLC	Programmable logic controller
PWM	Pulse-width modulation
RAM	Volatile memory
RBallast / RBR	Ballast resistor (= regen resistor)
RBext	External regen resistor
RBint	Internal regen resistor
RES	Resolver
ROD	digital encoder
S1	continuous operation
S3	Intermittent operation
SRAM	Static RAM
SSI	Synchronous serial interface
UL	Underwriters Laboratories
V AC	Alternating voltage
V DC	DC voltage
VDE	Society of German Electrical Technicians

	Danger to personnel from electricity and its effects effects		Danger to maschinery, general warning		Important notes
⇨ S.	see page	λ	special emphasis		

7 General

7.1 About this manual

This manual describes the PMCtendo DD5 and PMCprimo Drive3 series of digital servo amplifiers.

In this manual you can find information about:

- Technical description of the PMCtendo DD5 and PMCprimo Drive3 — Chapter 7.7
- Assembly / installation — Chapter 8
- Interfaces — Chapter 9
- Setup — Chapter 10
- Accessories — Chapter 11
- Transport, storage, maintenance and disposal — Chapter 12

The programming of the PMCprimo Drive3 is described explicitely in the PMCprimo programming manual.

The parameterisation of the PMCtendo DD5 is described in detail in the PDrive user manual.

Useful hints about linking controls and CANopen devices via CAN bus can be found in the manual „PMCprimo CAN network“.

All manuals are part on the CD-ROM PMCprimo Motion Control Tools.

7.2 Requirements

This manual addresses personnel with the following qualifications:

Transport : **only by personnel with knowledge of handling electrostatically sensitive components.**

Installation : **only by electrically qualified personnel.**

Setup : **only by qualified personnel with extensive knowledge of electrical engineering and drive technology**

7.3 Use as directed

Servo amplifiers are components that are built into electrical plant or machines, and can only be operated as integral components of such plant or machines.

The manufacturer of the machine must generate a hazard analysis for the machine, and take appropriate measures to ensure that unforeseen movements cannot cause injury or damage to any person or property.

Servo amplifiers in the PMCprimo Drive3 and PMCtendo DD5 series can be supplied from 3-phase grounded (earthed) industrial supply networks (TN-system, TT-system with grounded neutral point, no more than 5000A symmetrical rated current at 230V or 480V+10%).
The servo amplifiers must not be operated directly on non-grounded supply networks or on asymmetrically grounded supplies with a voltage >230V. Connection to other types of supply networks (with an additional isolating transformer) is described on p. 17 .

Periodic overvoltages between phases (L1, L2, L3) and the housing of the servo amplifier must not exceed 1000V crest.
In accordance with EN 61800, voltage spikes (< 50µs) between phases must not exceed 1000V. Voltage spikes (< 50µs) between a phase and the housing must not exceed 2000V.

If the servo amplifiers are used in residential areas, in business/commercial areas, or in small industrial operations, then additional filter measures must be implemented by the user.

The PMCprimo Drive3 and PMCtendo DD5 family of servo amplifiers is exclusively intended for driving suitable brushless synchronous servomotors and asynchronous motors with closed-loop control of torque, speed and/or position. The rated voltage of the motors must be at least as high as the DC bus link voltage produced by the servo amplifier.

The servo amplifiers must only be operated in a closed control cabinet, taking into account the ambient conditions defined on page 22 . Ventilation or cooling may be necessary to keep the temperature within the cabinet below 40°C.

Use only copper conductors for wiring. The conductor cross-sections can be derived from the standard EN 60204 (alternatively for AWG cross-sections: NEC Table 310-16, 60°C or 75°C column).

We only guarantee the conformance of the servo system with the standards cited on p. 8 if the components (servo amplifier, motor, cables etc.) are those supplied by us.

Restart lock for personnel safety

The servo amplifier has an integrated personnel safe restart lock, which meets the requirements of safety category 3 according to EN 954-1.

The conceptual examination of the function "safe stop" (called restart lock AS in the following) was accomplished by the BG-Institute for Occupational Safety and Health and the classification in category 3 according to EN 954-1 was confirmed.

Please consider the specifications on page 85 when you use this function.

7.4 Instrument description

7.4.1 Package supplied

When you order an amplifier from the series PMCtendo DD5 resp. PMCprimo Drive3, you will receive:

- Mating connectors X0, X3, X4, X8, X9 (only 230V amplifiers)
- Assembly, Installation and Setup instructions
- Setup software PMCprimo Motion Control Tools on CD-ROM
- User manual PDrive and PMCprimo programming manual on CD-ROM

7.4.2 Common accessories

- Synchronous servomotor of the series PMCtendo AC1, PMCtendo AC2 or PMCtendo AC3
- Motor cable (prefabricated), or both power connectors separately, with the motor cable as a cut-off length
- Feedback cable (prefabricated) or both feedback connectors separately, with the feedback cable as a cut-off length
- External regen resistor
- Motor choke
- Line filter curve “B”
- Communication cable to the PC for setting parameters from a PC

7.4.3 Accessories for PMCprimo Drive3

- MODBUS panel (PMI series) and communication cable
- CAN cables (different length available)
- Software keys for Motion Generator, Soft-PLC or CNC functionality
- Ethernet cabel
- Adapter cabel Modbus/Profibus
- PMCprimo expansion board (see page 109)
- CompactFlash cards
- Profibus DP Slave Interface (Profibus-IC)
- Master encoder

7.4.4 The PMCtendo DD5 family of digital servo amplifiers

7.4.4.1 Standard version

- Two voltage classes with large nominal voltage range
  Series 230V: 1 x $110V_{-10\%}$ ... 3 x $230V^{+10\%}$ (3A, 6A and 10A)
  Series 480V: 3 x $208V_{-10\%}$ ... 3 x $480V^{+10\%}$ (1.5A, 3A and 6A)
- Instrument width: 70 mm
- Shielding connection directly on the servo amplifier
- Two analog inputs
- Integrated CANopen (default: 500 kBaud), for integration in CAN-bus systems and for setting parameters for several drives via the PC interface of one of the amplifiers
- Integrated RS232, integrated pulse direction interface
- Integrated restart lock -AS- for personnel safety, ⇨ p. 85

7.4.4.2 Power section

- Directly on grounded 3-phase supply, $110V_{-10\%}$ or $230V_{-10\%}$ up to $480V^{+10\%}$
  TN-network or TT-network with grounded neutral point, 5000 A max. symmetrical current rating, connection to other supply types only via isolating transformer, ⇨ p. 17
- B6 bridge rectifier, integral supply filter and soft-start circuit
- Single-phase supply operation possible (e.g. for setup)
- Fusing (e.g. fusible cutout) to be provided by the user
- Shielding All shielding connections are made directly on the amplifier
- Output stage IGBT module with floating current measurement
- Regen circuit with dynamic distribution of the regenerated power between several amplifiers on the same DC bus link circuit. Internal regen resistor as standard, external regen resistors if required
- DC bus link voltage 135 … 450 V DC or 260 … 900 V DC, can be connected in parallel
- Interference suppression filters are integrated for the electrical supply feed and the 24V auxiliary supply voltage (with motor cable ≤ 10m for general availability as per EN 61800-3, with motor cable < 10m for 2nd environmental category as per EN 61800-3)

7.4.4.3 Integrated safety

- Appropriate insulation/creepage distances and electrical isolation ensure safe electrical separation, as per EN 50178, between the power input / motor connections and the signal electronics
- Soft-start, overvoltage detection, short-circuit protection, phase-failure monitoring
- Temperature monitoring of the servo amplifier and motor (if our motors and prefabricated cables are used)

7.4.4.4 Auxiliary supply voltage 24V DC

- Electrically isolated, internal fusing, from an external 24V DC power supply unit with, for instance, isolating transformer or uninterruptible power supply

7.4.4.5 Operation and parameter setting

- With our user-friendly setup software **PDrive**, for setup via the serial interface of a PC
- If no PC is available: direct operation by two keys on the servo amplifier and a 3-character LED display
- Fully programmable via RS232 interface

7.4.4.6 Completely digital control

- Digital current controller (space vector, pulse-width modulation, 62.5 µs)
- Adjustable digital speed controller (62.5 µs)
- Integrated position controller, with adaptation possibilities for all applications (250 µs)
- Integrated step/direction interface for connecting a servomotor to a stepper controller
- Evaluation of resolver signals and sine-cosine signals of high-resolution encoders
- Encoder emulation (incremental, compatible with A quad B or SSI)

7.4.4.7 Comfort functions

- 2 programmable analog inputs
- 4 programmable digital inputs
- 2 programmable digital outputs
- programmable logical combinations of digital signals

7.4.4.8 Expansions

- I/O-14/08 expansion card, ⇨ p. 103
- PROFIBUS DP expansion card, ⇨ p. 106
- PMCprimo board and PMCprimo expansion card, ⇨ p. 109
- CAN adapter expansion module, separated connectors for CAN-bus and RS232, ⇨ p. 107

7.4.5 The PMCprimo Drive3 family of digital servo amplifiers

In addition to the PMCtendo DD5 functionality the PMCprimo Drive3 offers further possibilities:

7.4.5.1 Performance data

- Position controller with 1 ms cycle time using 10 axis
- 9 axes in system: 1 Motor direct, as well as 8 other channels for controlling further axes
- Input for one master encoder (incremental / absolut SSI) or via CAN
- Each axis can operate in virtual motor mode
- Software gearbox
- Software differential and clutch
- Internal map generator (motion generator) as an option
- Product referencing
- Tension control
- CNC function (DIN 66025) as an option
- Up to 8 CAM
- Soft positioning

7.4.5.2 Fieldbus Interface

- CAN-Bus with 500 kBit/s or 1 MBit/s (CANopen) – linking up to 60 PMCprimo motion control systems
- MODBUS/RS422 interface – connecting panels
- Option: Profibus DP slave modul – easy communication with PLC
- Option: Ethernet 10/100 Mbit/s
- Option: 2nd CANpen interface

7.4.5.3 Soft-SPS CoDeSys®

- Soft-SPS CoDeSys® as an option
- Fully PLC functionality specified in IEC 61131-3
- PLC and PMCprimo - combined in one system

7.4.5.4 Interfaces

- 8 digital inputs, 24 V, electrically isolated
- 8 digital outputs, 24 V, short circuit protected and electrically isolated
- 1 input for a master encoder (incremental / absolut SSI)

7.4.5.5 Power supplies

- 24 V power supply
- Individual power supply for all master encoders

7.5 Connection to various electrical supply networks

This page illustrates all the possible connection variations for different electrical supply networks.

An isolating transformer is always required for 400 … 480V networks that are asymmetrically grounded or not grounded.

230V series:

480V series:

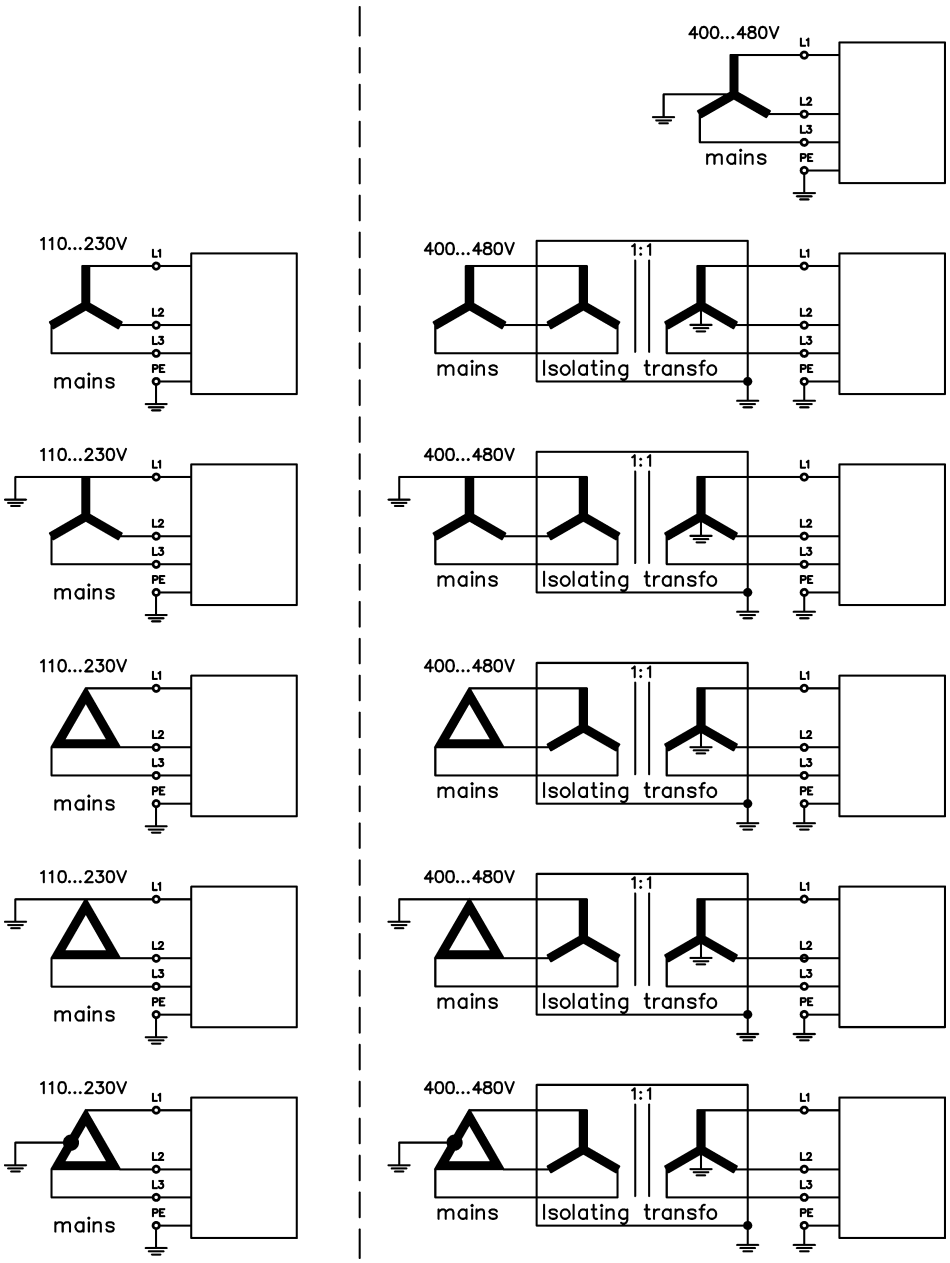

7.6 Components of a servo system

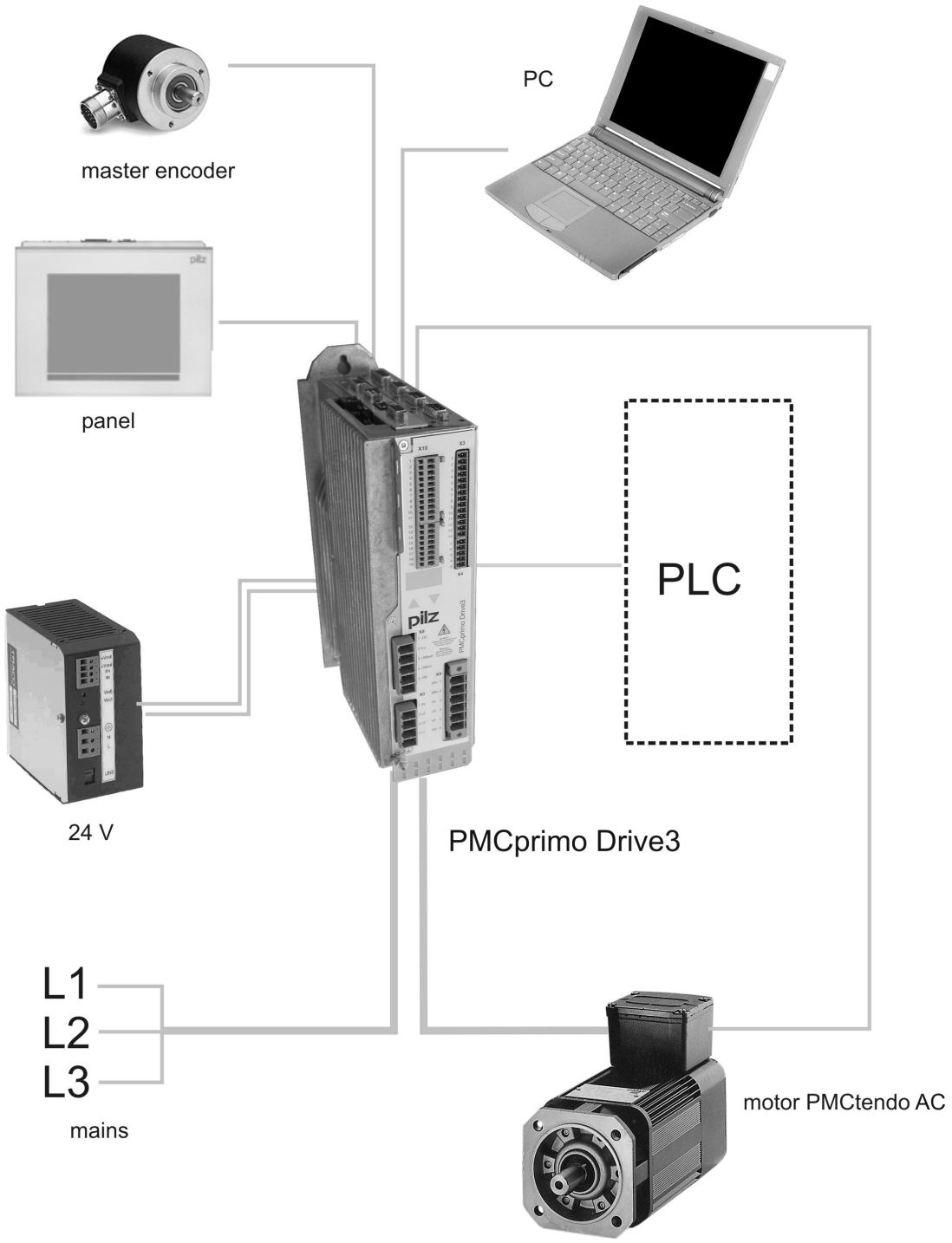

7.7 Technical data

7.7.1 Technical data 230 V series

Rated data	**DIM**	**PMCtendo DD5 PMCprimo Drive3**		
Size	—	3A	6A	10A
Rated supply voltage(grounded supply, phase to phase)	V~	1 x 110V$_{-10\%}$ … 1 x 230V$^{+10\%}$ 3 x 110V$_{-10\%}$ … 3 x 230V$^{+10\%}$ 50/60 Hz		
Rated input power for S1 operation	kVA	1.1	2.4	4
Max. DC bus link voltage	V=	450		
Rated output current (rms value, ± 3%)				
at 1x110V	Arms	3	3	3
at 3x115V	Arms	3.5	8	10
at 3x230V	Arms	3	6	10
at 1x230/240V	Arms	3	4	4
Peak output current (rated current x 2 for approx. 5s, ± 3%)				
at 1x110V	Arms	5	5	5
at 3x115V	Arms	9	15	20
at 3x230V	Arms	9	15	20
at 1x230/240V	Arms	9	9	9
Switching frequency of the output stage	kHz	8 (16*)		
Technical data for regen circuit	—	⇨ p. 26		
Threshold for overvoltage switch-off	VDC	235 / 455		
Motor inductance min.				
at 1x110V	mH	3.7	3.7	3.7
at 3x115V	mH	2.1	1.3	1.0
at 3x230V	mH	4.3	2.6	1.9
at 1x230/240V	mH	4.3	4.3	4.3
Motor inductance max.	mH	Consult our customer support		
Form factor of the output current(rated conditions, min. load inductance)	—	1.01		
Bandwidth of current controller	kHz	> 1,2		
Residual voltage drop at rated current	V	4		
Thermal dissipation, output stage disabled	W	12		
Thermal dissipation at rated current (incl. PSU losses, without regen dissipation)	W	35	60	90
Mechanical				
Weight	kg	ca. 2.6		
Height, without connectors	mm	275	278	
Width	mm	70		
Depth, without connectors	mm	171		
Depth, with connectors	mm	< 200		

* at reduced current

7.7.2 Technical data 480 V series

Rated data	**DIM**	**PMCtendo DD5 PMCprimo Drive3**		
Size		1.5A	3A	6A
Rated supply voltage (grounded supply, phase to phase)	V~	3 x 208V$_{-10\%}$ … 480V$^{+10\%}$, 50/60 Hz		
Rated input power for S1 operation	kVA	1.2	2.5	5
Max. DC bus link voltage	V=	900		
Rated output current (rms value, ± 3%)				
at 3x208V	Arms	2	5	6
at 3x230V	Arms	2	5	6
at 3x400V	Arms	1.5	4	6
at 3x480V	Arms	1.5	3	6
Peak output current (rated current x 2 for approx. 5s, ± 3%)				
at 3x208V	Arms	4.5	7.5	12
at 3x230V	Arms	4.5	7.5	12
at 3x400V	Arms	4.5	7.5	12
at 3x480V	Arms	4.5	7.5	12
Switching frequency of the output stage	kHz	8 (16*)		
Technical data for regen circuit	—	⇨ p. 26		
Threshold for overvoltage switch-off	VDC	455 / 800 / 900		
Motor inductance min.				
at 3x208V	mH	7.7	4.6	2.9
at 3x230V	mH	8.5	5.1	3.2
at 3x400V	mH	14.8	8.9	5.6
at 3x480V	mH	17.8	10.7	6.7
Switching frequency of the output stage	mH	Consult our customer support		
Technical data for regen circuit	—	1.01		
Threshold for overvoltage switch-off	kHz	> 1.2		
Motor inductance min.	V	5		
Switching frequency of the output stage	W	12		
Thermal dissipation at rated current (incl. PSU losses, without regen dissipation)	W	40	60	90
Mechanical				
Weight	kg	ca. 2.7		
Height, without connectors	mm	275	278	
Width	mm	70		
Depth, without connectors	mm	171		
Depth, with connectors	mm	< 235		

* at reduced current

7.7.3 Inputs / outputs

Analog inputs 1, 2 (resolution 14/12 bit)	V	±10
Max. common-mode voltage	V	±10
Input resistance to AGND	kΩ	20
Digital control inputs	V	as per EN 61131-2 Type 1, max. 30VDC
Digital control outputs, active high	V	open Emitter, max. 30VDC, 10mA
BTB/RTO output, relay contacts	V	DC max. 30, AC max 42
	mA	500
Digital inputs (X10)	V	as per EN 61131-2 Type 2, max. 30VDC
Digital outputs (X10)	V	open Emitter, max. 30VDC, 100mA
Auxiliary supply voltage, electrically isolated, without brake/fan	V	20 – 30
	A	1.3
Auxiliary supply voltage, electrically isolated, with brake/fan (check voltage drop !)	V	24 (-0% +15%)
	A	2.8
Max. output current to brake	A	1.5
Master encoder supply	V	5-24V, see datasheet encoder
12V supply CAN	V	12
	mA	10 each PMCprimo client
Connection technology		
Control signals	—	Combicon connector
Power signals	—	Combicon connector
Resolver input	—	SubD 9pol. (socket)
Incremental encoder input	—	SubD15pol. (socket)
PC- interface, CAN (X6, X11/2)	—	SubD 9pol. (plug)
CAN (X11/1), Master encoder, CAN-2 (option)	—	SubD 9pol. (socket)
Encoder emulation, ROD/SSI	—	SubD 9pol. (plug)
Modbus/Ethernet		RJ45 (socket)

7.7.4 Recommended tightening torques

Connector	**Tightening torque**
X0, X8, X9	0.5 .. 0.6 Nm
Grounding bolt	3.5 Nm

7.7.5 Fusing

7.7.5.1 Internal fusing

Circuit	**Internal fuse**
Auxiliary voltage 24V (X4)	3.15 A (slow)
Auxiliary voltage 24V (X10)	electronic
Regen resistor	electronic

7.7.5.2 External fusing

Wire fuses or similar	**1.5A, 3A**	**6A, 10A**
AC supply feed $F_{N1/2/3}$ (X0/1; 2; 3)	6 AT (FRx-6)	10 AT (FRx-10)
24V feed $F_{H1/2}$	Max. 8 AF (FRx-12)	
Regen resistor $F_{B1/2}$ (X8/2; 4)	6 AT (FRS-6)	6 AT (FRS-6)

x = S or S-R for 480V applications x = N or N-R for 230V applications

7.7.6 Permissible ambient temperatures, ventilation, mounting position

Storage hints	⇨ p. 112
Transport hints	⇨ p. 112
Supply voltage tolerances Supply input Auxiliary supply without brake and fan with brake or fan	 230V series: 1x110V$_{-10\%}$ … 1x230V$^{+10\%}$, 50/60 Hz 3x110V$_{-10\%}$ … 3x230V$^{+10\%}$, 50/60 Hz 480V series: 3x208V$_{-10\%}$ - 3x 480V$^{+10\%}$, 50/60 Hz 20 V DC … 30 V DC 24 V DC (-0% +15%), check voltage drop!
Ambient temperature in operation	0...+40°C under rated conditions +40...+55°C with power derating 2.5% / K
Humidity in operation	rel. humidity 85%, no condensation
Site altitude	up to 1000 meters a.m.s.l. without restriction 1000…2500 meters a.m.s.l. with power derating 1.5% / 100meters
Pollution level	Pollution level 2 as per IEC 60664-1, 2.5.1
Enclosure protection	IP 20
Mounting position	vertical ⇨p. 30
Ventilation 1 A and 3 A types **all other types**	**natural convection** **built-on fan**
Make sure that there is sufficient forced ventilation within the control cabinet.	

7.7.7 Conductor cross-sections

Following EN 60204, we recommend for **single-axis systems**:

AC connection	1.5 mm² (14AWG)	600V,105°C
DC bus linkRegen resistor	1.5 mm² (14AWG)	1000V, 105°C, shielded for lengths >20cm
Motor cables up to 25 m*	1...1.5 mm², (14AWG)	600V,105°C, shielded, C<150pF/m
Motor cables 25m to 50 m*, with motor choke	1 mm² (14AWG)	600V,105°C, shielded, C<150pF/m
Resolver, motor thermostat	4x2x0.25 mm², max.100m* (22AWG)	twisted pairs, shielded, C<120pF/m
Encoder, motor thermostat	7x2x0.25 mm², max. 50m* (22AWG)	twisted pairs, shielded
Setpoints, AGND	8x2x0.25 mm², max. 25m* (22AWG)	twisted pairs, shielded
Control signals, BTB, DGND	0.25 mm² (22AWG)	twisted pairs, shielded
Holding brake (motor)	0.5 mm² (20AWG)	
+24 V / DGND	min. 0.75 mm (18AWG)	600V, 105°C, shielded, check voltage drop
+24 V / DGND	max. 2.5 mm² (12AWG)	check voltage drop
For multi-axis systems, observe the specific operating conditions for your system. **Observe the technical data for cables on page ⇨ p. 22**		

* North America supplies cables up to 39 meters
* Europe supplies cables up to max. length

7.7.8 LED display

7.7.8.1 PMCtendo DD5

A 3-character LED display indicates the status of the amplifier after switching on the 24V supply (⇨ p.94).

When the keys on the front panel are used, the parameter and function numbers are shown, as well as the numbers for any errors that may occur (⇨ p.98).

7.7.8.2 PMCprimo Drive3

A 3-character LED displays the servo amplifiers firmware version after switching on the 24V supply for two seconds (e.g. “5.18”).
Afterwards the status of up to 10 axes is shown (or just “run”). (➔ p.101).
When an error occurs the error number is displayed (➔ p.100).

7.8 Control circuit for motor-holding brake

A 24V / max.1.5A holding brake in the motor can be controlled directly by the amplifier.

Check voltage drop, measure the voltage at brake input and check brake function (brake and no brake).
This function does not ensure personnel safety!

The brake function must be enabled through the BRAKE parameter (screen page: Motor, setting: WITH). In the diagram below you can see the timing and functional relationships between the ENABLE signal, speed setpoint, speed and braking force.

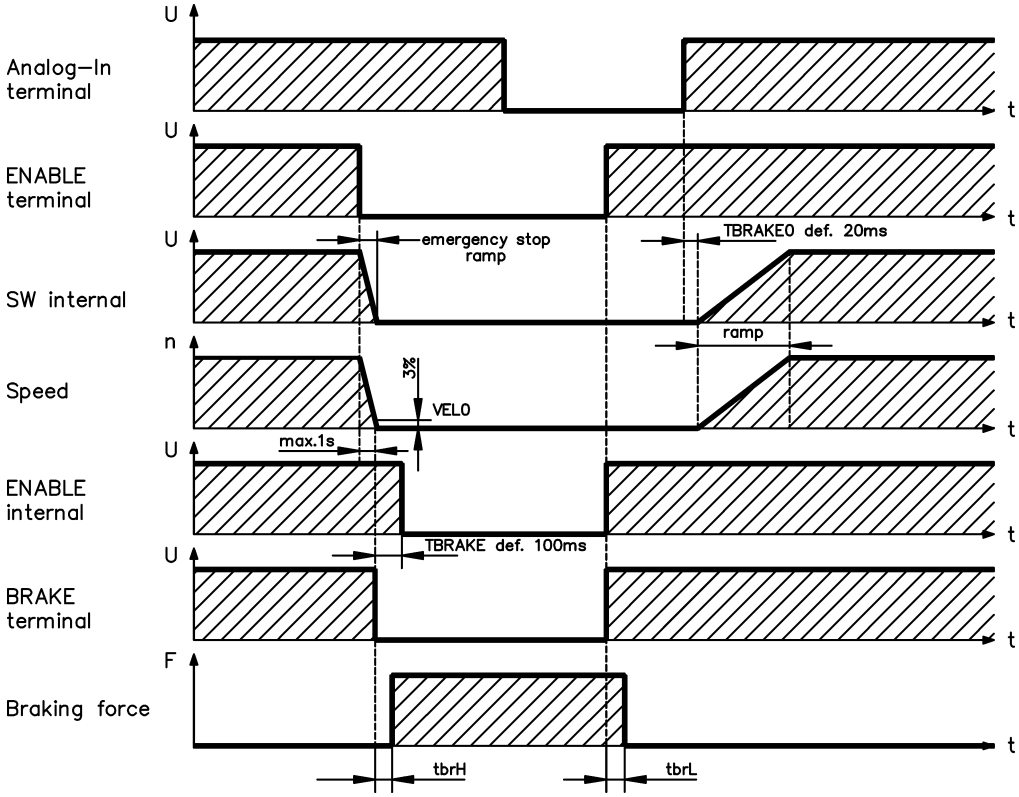

During the internal ENABLE delay time of 100ms, the speed setpoint of the servo amplifier is internally driven down an adjustable ramp to 0V. The output for the brake is switched on when the speed has fallen to 3% of the preset final speed, at the latest after 1 second.
The rise (f_{brH}) and fall (f_{brL}) times of the holding brake that is built into the motor are different for the various types of motor (see motor manual). A description of the interface can be found on page 47 . Operation of the brake in a manner that provides personnel safety requires an additional “make” contact in the brake circuit, and a suppressor device, such as a varistor, for the brake circuit.

Recommended circuit:

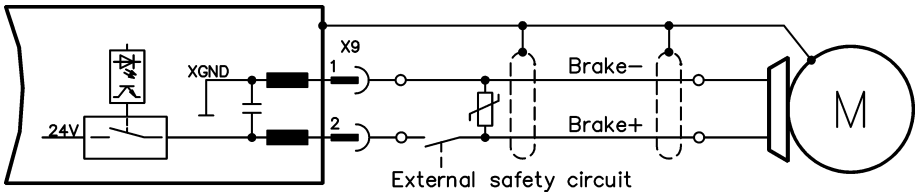

7.9 Grounding system

AGND — analog inputs, internal analog ground, encoder emulation, RS232, CAN (X6)
DGND — digital inputs/outputs and the 24V supply, optically isolated
EGND — digital inputs/outputs (X10); 24V supply PMCprimo Drive3, supply master encoder, optically isolated

7.10 Regen circuit

During braking with the aid of the motor, energy is fed back into the servo amplifier. This regenerative energy (hence the term “regen” circuit) is dissipated as heat in the regen resistor. The regen resistor is switched in by the regen circuit.

The setup software **PDrive** can be used to adapt the regen circuit (thresholds) according to the electrical supply voltage.

Our customer service can help you with the calculation of the regen power that is necessary for your system.

A description of the interface can be found on page 48.

7.10.1 Functional description

1. Individual amplifiers, **not coupled** through the DC bus link circuit (DC+, DC-)

   If the energy fed back from the motor has an average or peak power that exceeds the preset level for the regen power rating, then the servo amplifier generates the warning “n02 regen power exceeded” and the regen circuit is switched off.

   The next internal check of the DC bus link voltage (after a few milliseconds) detects an overvoltage and the servo amplifier is switched off, with the error message “Overvoltage F02” (⇨ p. 98).

   The BTB/RTO contact (terminals X3/2,3) will be opened at the same time (⇨p. 62).

2. Several servo amplifiers **coupled** through the DC bus link (DC+, DC-)

   Thanks to the built-in regen circuit, several amplifiers (even with different current ratings) can be operated off a common DC bus link, without requiring any additional measures.

   The **combined (peak and continuos) power** of all amplifiers is always available. The switch-off on overvoltage takes place as described under 1. (above) for the amplifier that has the lowest switch-off threshold (resulting from tolerances).

Technical data of the regen circuits dependent on the amplifiers type and the mains voltage situation see table on the next page.

7.10.2 Technical Data

Regen circuit			Supply voltage			
	Rated data	**DIM**	**115 V**	**230 V**	**400 V**	**480 V**
230V series 3A	Switch-on (upper) threshold of regen circuit	V	200	400	—	
	Overvoltage F02	V	235	455		
	Regen resistor (internal)	Ohm	66	66		
	Continuous power in regen circuit (RBint)	W	20	20		
	Pulse power in regen circuit (RBint max. 1s)	kW	0.75	3		
	Regen resistor (external)*	Ohm	66	66		
	Continuous power in regen circuit (RBext) max.	kW	0.3	0.3		
	Pulse power in regen circuit (RBext max. 1s)	kW	0.75	3		
230V series 6A and 10A	Switch-on (upper) threshold of regen circuit	V	200	400	—	
	Overvoltage F02	V	235	455		
	Regen resistor (internal)	Ohm	66	66		
	Continuous power in regen circuit (RBint)	W	50	50		
	Pulse power in regen circuit (RBint max. 1s)	kW	0.75	3		
	Regen resistor (external)*	Ohm	66	66		
	Continuous power in regen circuit (RBext) max.	kW	1	1		
	Pulse power in regen circuit (RBext max. 1s)	kW	0.75	3		
480V series 1.5A	Switch-on (upper) threshold of regen circuit	V	—	400	720	840
	Overvoltage F02	V		455	800	900
	Regen resistor (internal)	Ohm		91	91	91
	Continuous power in regen circuit (RBint)	W		20	20	20
	Pulse power in regen circuit (RBint max. 1s)	kW		2.1	7	9
	Regen resistor (external)*	Ohm		91	91	91
	Continuous power in regen circuit (RBext) max.	kW		0.3	0.3	0.3
	Pulse power in regen circuit (RBext max. 1s)	kW		2.1	7	9
480V series 3A and 6A	Switch-on (upper) threshold of regen circuit	V	—	400	720	840
	Overvoltage F02	V		455	800	900
	Regen resistor (internal)	Ohm		91	91	91
	Continuous power in regen circuit (RBint)	W		50	50	50
	Pulse power in regen circuit (RBint max. 1s)	kW		2.1	7	9
	Regen resistor (external)*	Ohm		91	91	91
	Continuous power in regen circuit (RBext) max.	kW		1.0	1.0	1.0
	Pulse power in regen circuit (RBext max. 1s)	kW		2.1	7	9

* Partially other resistance values are possible. Please ask our customer support.

7.11 Switch-on and switch-off behavior

The diagram below illustrates the correct functional sequence for switching the servo amplifier on and off.

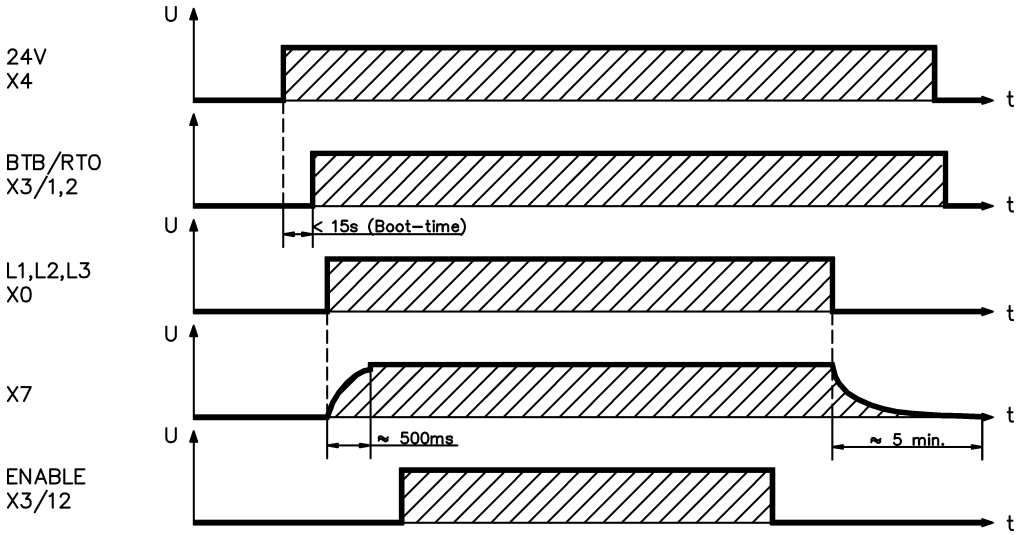

7.11.1 Stop function as per EN 60204 (VDE 0113)

If a fault occurs (⇨ p. 98) then the output stage of the servo amplifier is switched off and the BTB/RTO contact is opened. In addition, a global error signal can be generated at one of the digital outputs (terminals X3/16 and X3/17) – see online help for the setup software **PDrive**. These signals can be used by the higher-level control system to finish the current PLC cycle or to shut down the drive (with additional brake or similar).

On a PMCprimo Drive3 additionally a plaintext message will be generated and an error variable is set, too. This allows the user to define a special error program which will be executed.

Devices with activated (holding-)“Brake” function use a special sequence for switching off the output stage (⇨ p. 24).

The “Stop” functions are defined in EN 60204 (VDE 0113), Paras. 9.2.2, 9.2.5.3.
There are three categories of stop functions:

Category 0: Shutdown by an immediate switch-off of the energy supply to the drive machinery (i.e an uncontrolled shutdown);

Category 1: A controlled shutdown, during which the supply of energy to the drive machinery is maintained as long as shutdown is being carried out, and only interrupted when standstill has been reached;

Category 2: A controlled shutdown, during which the supply of energy to the drive machinery is maintained.

Every machine must be equipped with a Category 0 stop function. Stop functions to Categories 1 and/or 2 must be provided if the safety of functional requirements of the machine make them necessary.

You can find further information and implementation examples in the Application Note “Stop and Emergency Stop Functions”.

7.11.2 Emergency Stop strategies

The Emergency Stop function is defined in EN 60204 (VDE 0113), Para. 9.2.5.4.

7.11.2.1 Implementation of the Emergency Stop function

Wiring recommendation can be found in the Application Note “Stop and Emergency Stop Functions"

7.11.2.2 Category 0

The controller enable is switched to “disable”, the electrical supply is disconnected. The drive must be held by an electromechanical holding device (brake).

In multi-axis systems with a coupled DC bus link, the motor cable must also be disconnected by a changeover switch (a contactor, such as the Siemens 3RT1516-1BB40) and short-circuited by resistors connected in a star configuration.

7.11.2.3 Category 1

If hazardous conditions can result from an Emergency Stop switch-off with an uncontrolled run-down, the drive can be switched off after a controlled shutdown.

Stop Category 1 permits electromotoric (i.e. regenerative) braking with a switch-off when zero speed has been reached. Safe shutdown can be achieved if the loss of the electrical supply is not evaluated as a fault and the control system takes over the disabling of the servo amplifier.

In normal circumstances, only the supply power is switched off in a safe manner. The 24V auxiliary supply remains switched on.

8 Installation

8.1 Important notes

- Protect the servo amplifier from impermissible stresses. In particular, do not let any components become bent or any insulation distances altered during transport and handling. Avoid contact with electronic components and contacts
- Check the combination of servo amplifier and motor. Compare the rated voltage and current of the units. Implement the wiring according to the connection diagram on page 34
- Make sure that the maximum permissible rated voltage at the terminals L1, L2, L3 or +DC, –DC is not exceeded by more than 10% even in the most unfavorable circumstances (see EN 60204-1 Section 4.3.1). An excessive voltage on these terminals can lead to destruction of the regen circuit and the servo amplifier
- The fusing of the AC supply input and 24V supply must be installed by the user (⇨ p. 21)
- Take care that the servo amplifier and motor are properly grounded. Do not use painted (i.e. non-conductive) mounting plates
- Route power and control cables separately. We recommend a distance of at least 200mm. This improves the interference immunity required by EMC regulations.
  If a motor power cable is used that includes cores for brake control**, the brake control cores must be separately shielded.**
  Ground the shielding at both ends (⇨ p.34)
- Ground all shielding with large areas (low impedance), with metalized connector housings or shield connection clamps wherever possible. Notes on connection techniques can be found on page 38
- Feedback lines may not be extended, since thereby the shielding would be interrupted and the signal processing could be disturbed
- Lines between amplifiers and external regen resistor must be shielded
- Install all power cables with an adequate cross-section, as per EN 60204 (⇨ p. 39) and use the requested cable material (➔p. 39) to reach max. cable length
- Wire the BTB/RTO contact in series into the safety circuit of the installation. The safety circuit must operate the supply contactor. This is the only way to ensure monitoring of the servo amplifier
- Ensure that there is an adequate flow of cool, filtered air into the bottom of the control cabinet, or use a heat exchanger. Please refer to page 22
- It is permissible to use the setup software to alter the settings of the servo amplifier. **Any other alterations will invalidate the warranty**.

Never disconnect the electrical connections to the servo amplifier while it is live .In unfavorable circumstances this could cause destruction of the electronics.
Residual charges in the capacitors can have dangerous levels up to 300 seconds after switching off the electrical supply.
Measure the bus voltage on the DC bus link (+DC/-DC) and wait until the voltage has fallen below 40V.
Control and power connections can still be live, even if the motor is not rotating.

8.2 Guide to installation and wiring

The following notes should help you to carry out the installation in a sensible sequence, without overlooking anything important.

Site	In a closed control cabinet. Please refer to page 22. The site must be free from conductive or corrosive materials. For the mounting position in the cabinet ⇨ p. 30
Ventilation	Check that the ventilation of the servo amplifier is unimpeded, and keep within the permitted ambient temperature, ⇨ p.22. Keep the required space clear above and below the servo amplifier, ⇨ p. 30.
Assembly	Assemble the servo amplifier and power supply close together, on the conductive, **grounded** mounting plate in the cabinet.
Cable selection	Select cables in accordance with EN 60204, ⇨ p. 39
Grounding Shielding	For EMC-compliant shielding and grounding (⇨ p. 38) Ground the mounting plate, motor housing and CNC-GND of the control system. Notes on connection techniques 38
Wiring	**Route power leads and control cables separately.** **Wire the BTB/RTO contact in series into the safety circuit of the system.** — Connect the digital control inputs and outputs. — Connect up AGND (also if fieldbuses are used) — Connect the analog input source, if required. — Connect the feedback device. — Connect the encoder emulation, if required. — Connect the expansion card (see corresponding notes from page 102 on) — Connect the motor cable — Connect shielding to EMC connectors (shield connection) at both ends. Use the motor choke if cable > 25 meters. — Connect motor-holding brake, connect shielding to EMC — connector/shield connection at both ends. — If required, connect the external regen resistor (with fusing). — Connect the auxiliary supply (maximum permissible voltage values ⇨ p. 19) — Connect the main electrical supply (maximum permissible voltage values ⇨ p. 19) — Connect the PC (⇨ p. 72).
Final check	— Final check of the implementation of the wiring against the wiring diagrams that have been used

8.3 Assembly

Material: 3 x M5 hexagon socket screws to DIN 912
Tool required : 4 mm Allen key

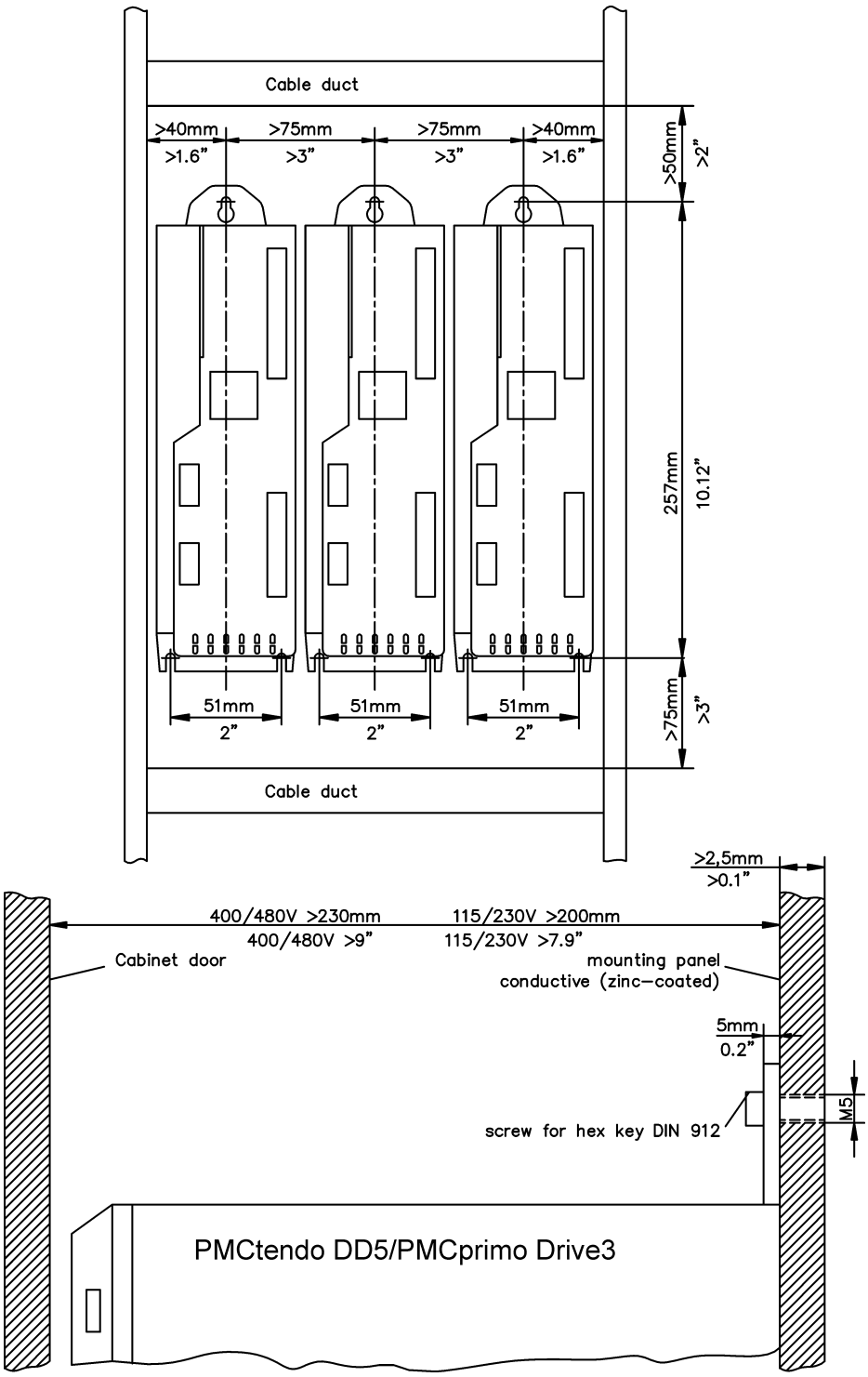

8.3.1 Dimensions

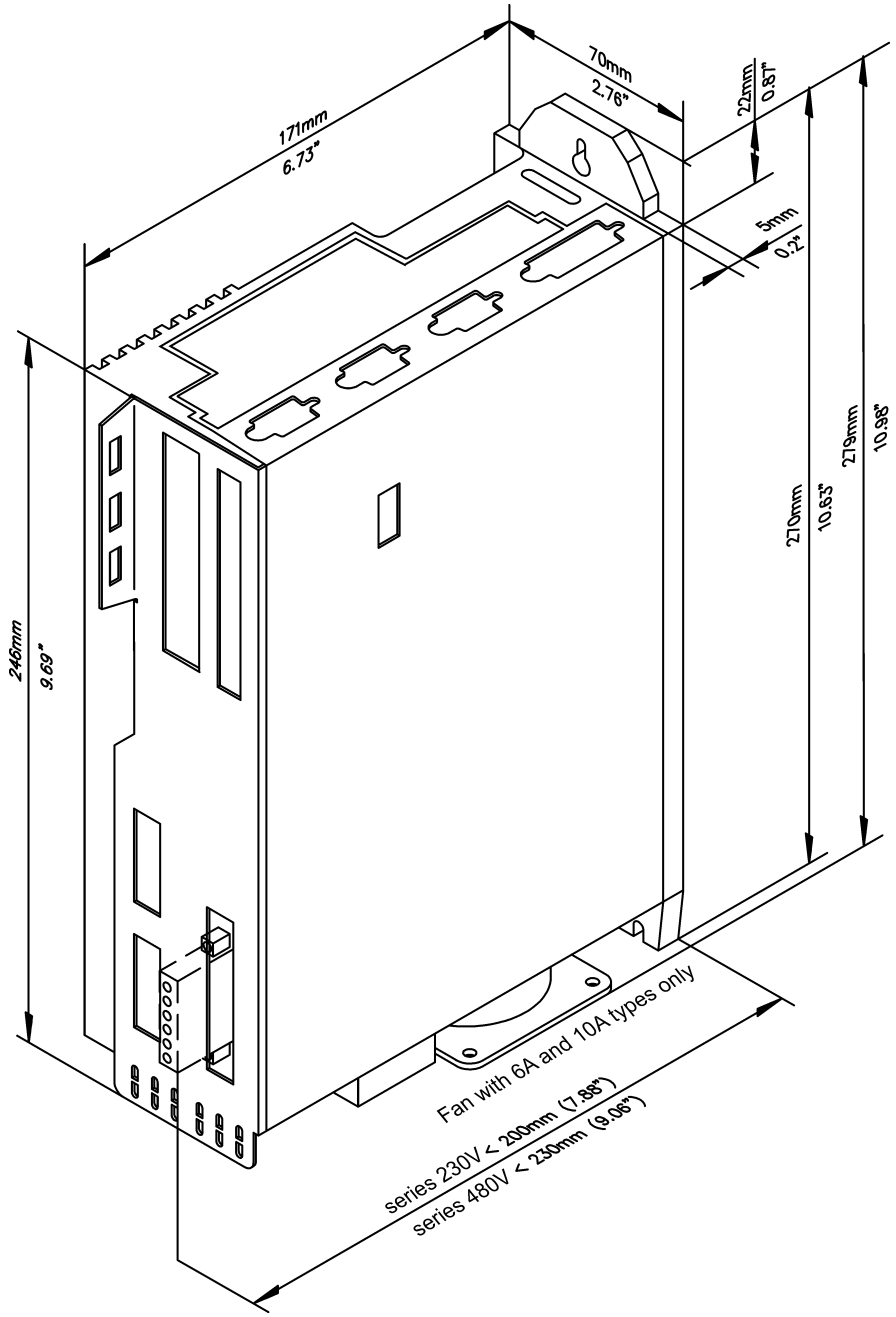

8.4 Wiring

Only professional staff who are qualified in electrical engineering are allowed to install the servo amplifier.

The installation procedure is described as an example. A different procedure may be appropriate or necessary, depending on the application of the equipments.

We provide further know-how through **training courses** (on request).

Warning !

Only install and wire up the equipment when it is not live, i.e. when neither the electrical supply nor the 24 V auxiliary voltage nor the supply voltages of any other connected equipment is switched on.
Take care that the cabinet is safely disconnected (with a lock-out, warning signs etc.).
The individual voltages will be switched on for the first time during setup.

The ground symbol ⏚ which you will find in all the wiring diagrams, indicates that you must take care to provide an electrically conductive connection with the largest feasible surface area between the unit indicated and the mounting plate in the control cabinet. This connection is for the effective grounding of HF interference, and must not be confused with the PE-symbol ⏚ (protective earth, safety measure as per EN 60204).

Use the following connection diagrams:

8.4.1 Connection diagram general

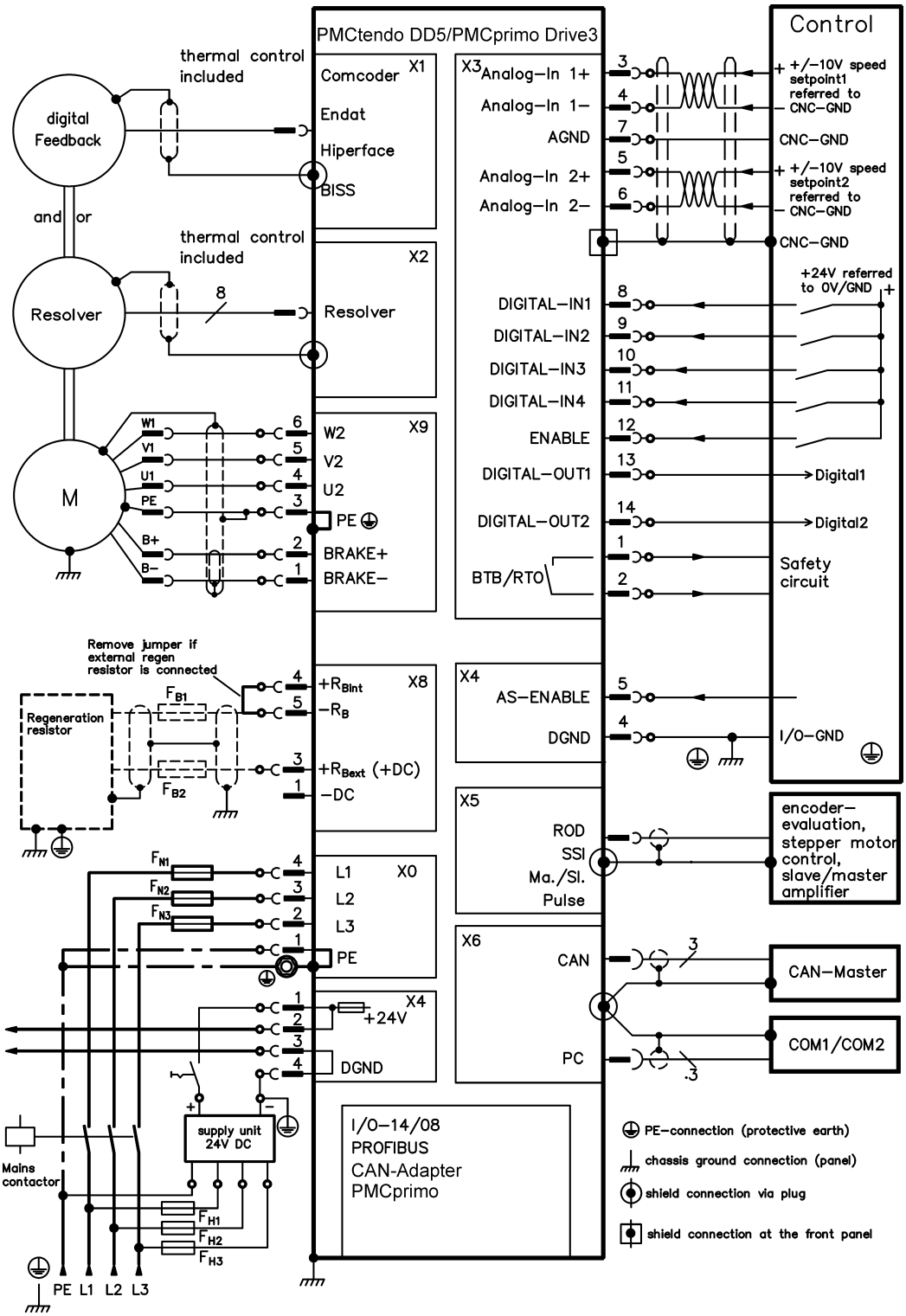

8.4.2 Connection diagram PMCprimo Drive3

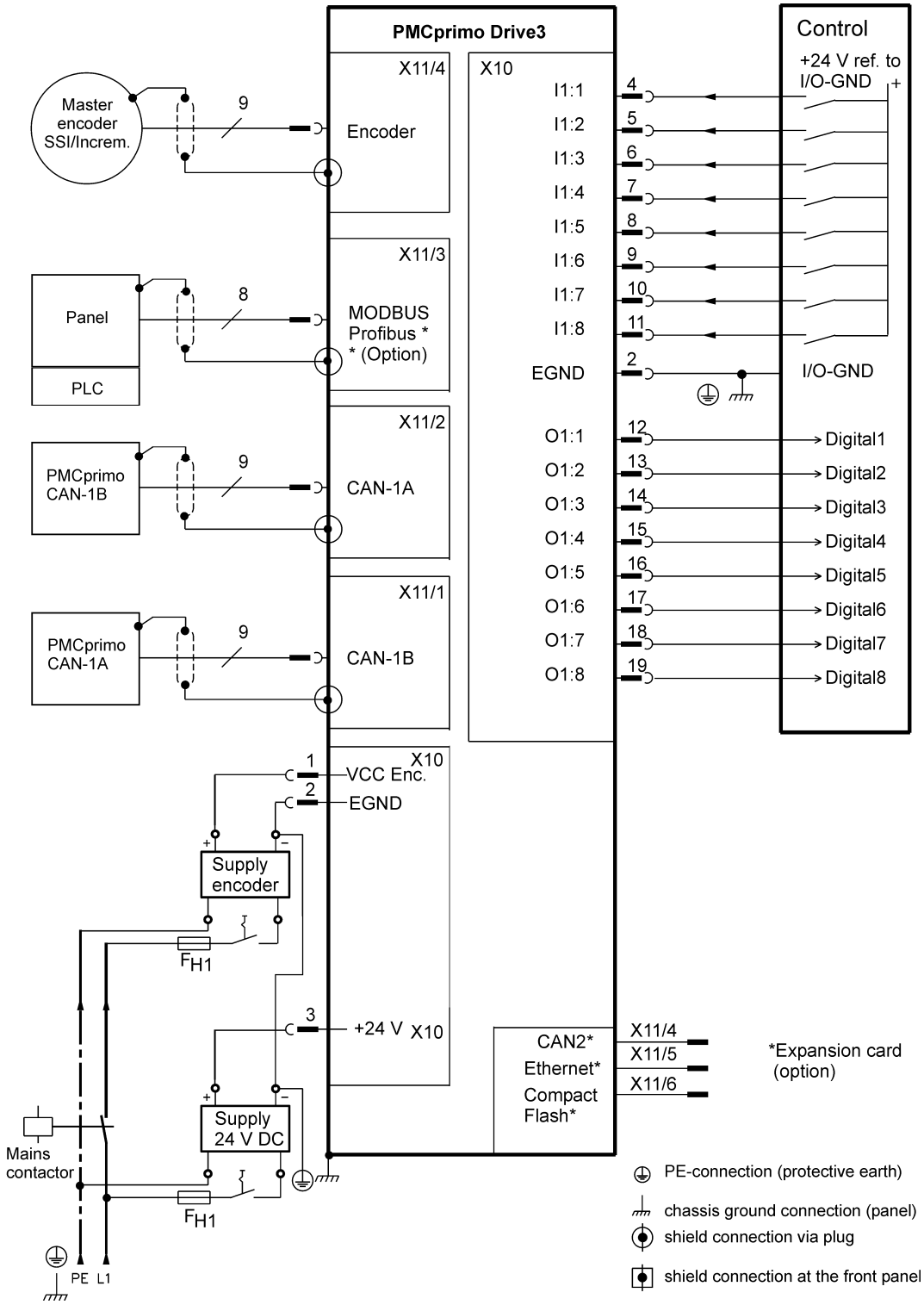

8.4.3 Connector assignments general

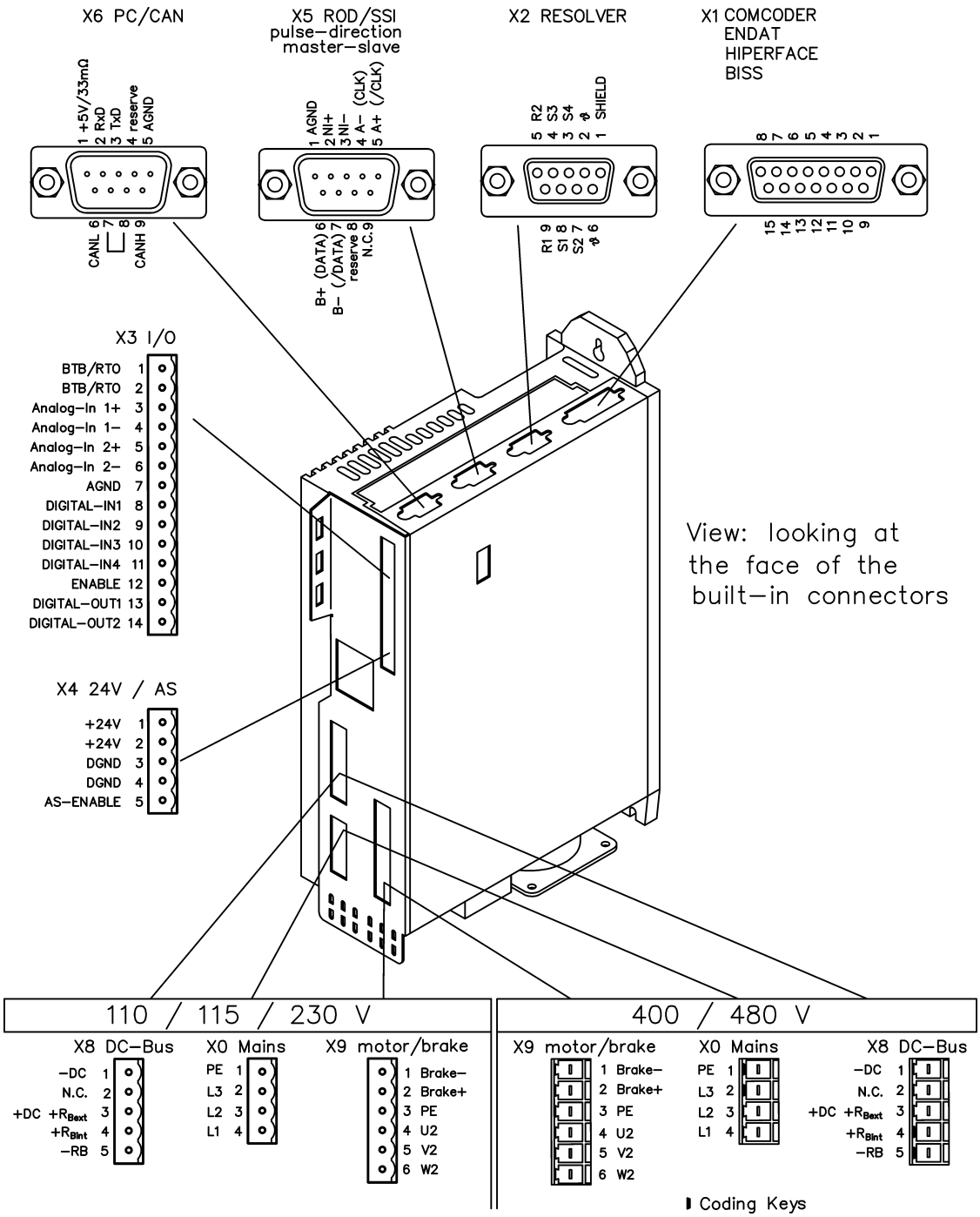

8.4.4 Connector assignments PMCprimo Drive3

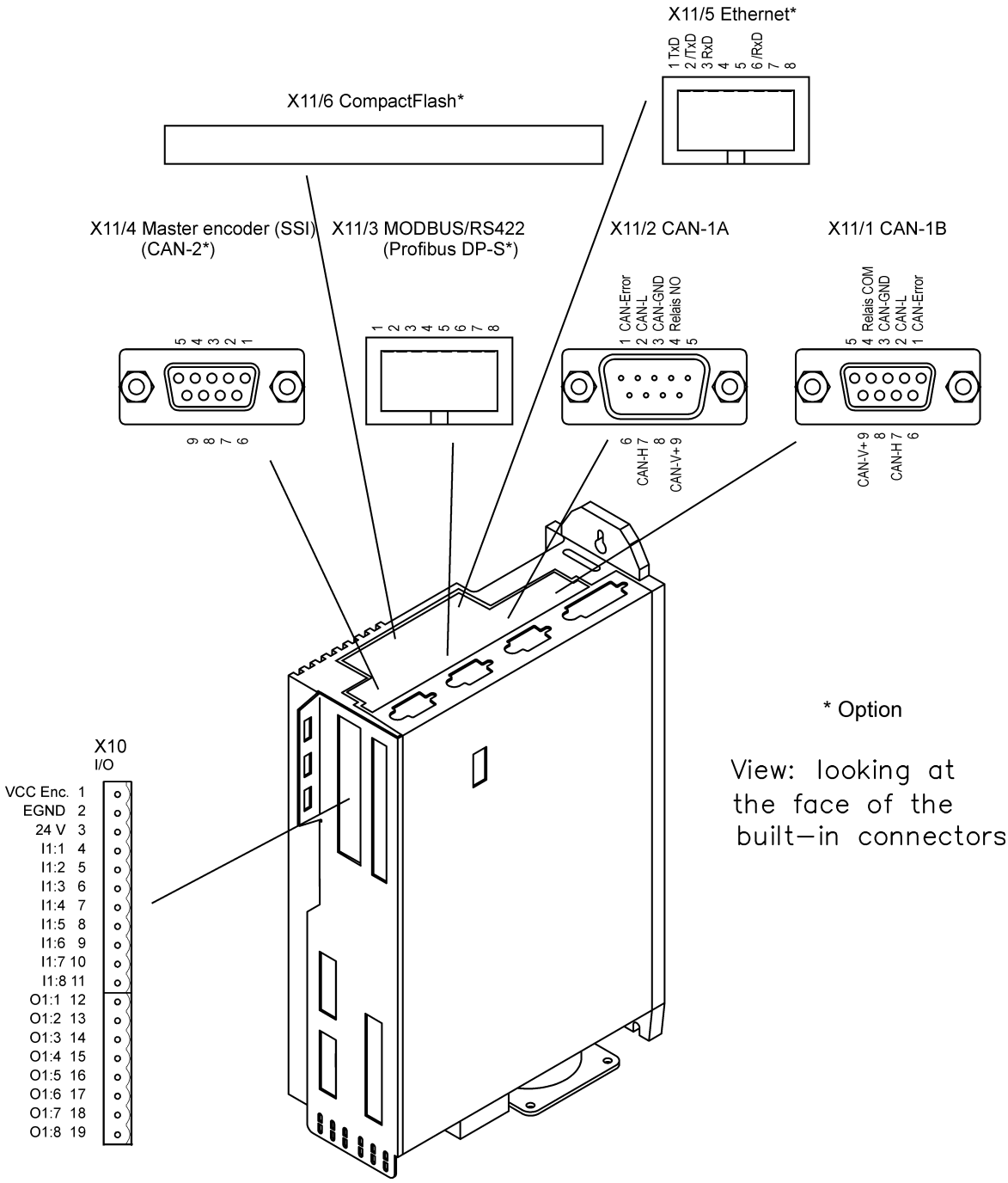

8.4.5 Notes on connection technology

8.4.5.1 Shielding connection to the front panel

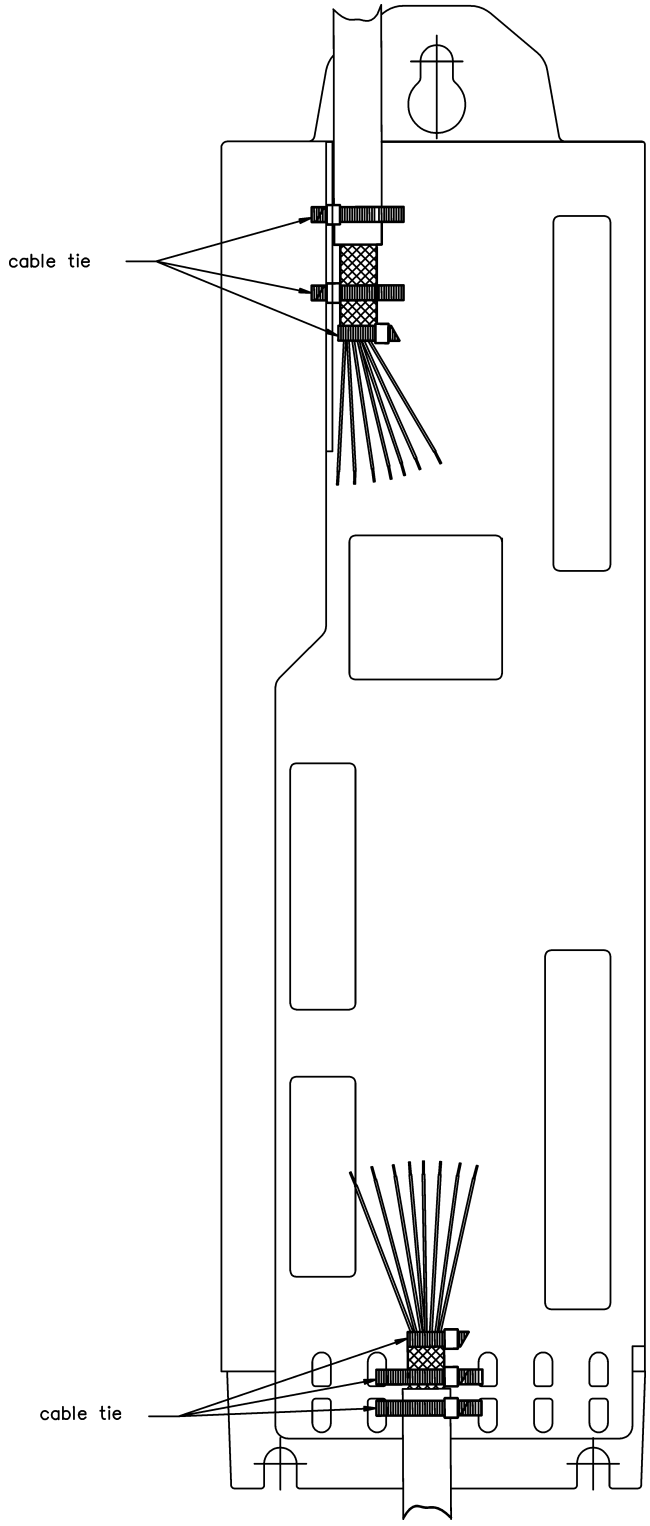

Remove the outside shroud of the cable and the shielding braid on the desired core length. Secure the cores with a cable tie.

Remove the outside shroud of the line on a length from for instance 30mm without damaging the shielding braid.

Pull a cable tie by the slot in the shielding rail on the front panel of the servo amplifier.

Press the shielding of the cable firmly against the front panel with the cable tie.

8.4.5.2 Technical data for connecting cables

Further information on the chemical, mechanical and electrical characteristics of the cables can be obtained from our customer service.

Observe the rules in the section "Conductor cross-sections" on page 22. To reach the max. permitted cable length, you must use cable material that matches the capacitance requirements listed below.

8.4.5.3 Insulation material

Sheating	PUR (polyurethane, code 11Y)
Core insulation	PETP (polyesteraphtalate, code 12Y)

8.4.5.4 Capacitance

Motor cable	less than 150 pF/m
Resolver-/Encoder cable	less than 120 pF/m

8.4.5.5 Technical data

- The brackets in the core definition indicate the shielding.
- All cables are suitable for use as trailing cables.
- The technical data refer to use as moveable cables.
- Operating life : 1 million bending cycles

Cores [mm²]	max. length [m]	Use for	Operating-temp. range [°C]	Outside diameter [mm]	Bending radius [mm]
(4x1.0)	50*	motor power	-30 / +80	10	100
(4x1.5)	50*	motor power	-30 / +80	10.5	105
(4x1.0+(2x0.75))	50*	motor incl. brake	-30 / +80	10.5	105
(4x1.5+(2x0.75))	50*	motor incl. brake	-30 / +80	11.5	120
(4x(2x0.25))	100*	Resolver	-30 / +80	7.7	70
(7x(2x0.25))	50*	Encoder	-30 / +80	9.9	90

* North America supplies cables up to 39 meters
* Europe supplies cables up to max. length

Motor cables longer than 25m only with motor choke.

You can order a special motor choke from us.

9 Interfaces

All the important interfaces are presented in this chapter. The precise position of the connectors and terminals can be seen on page 34. The block diagram below just provides an overview.

9.1 Block diagram general

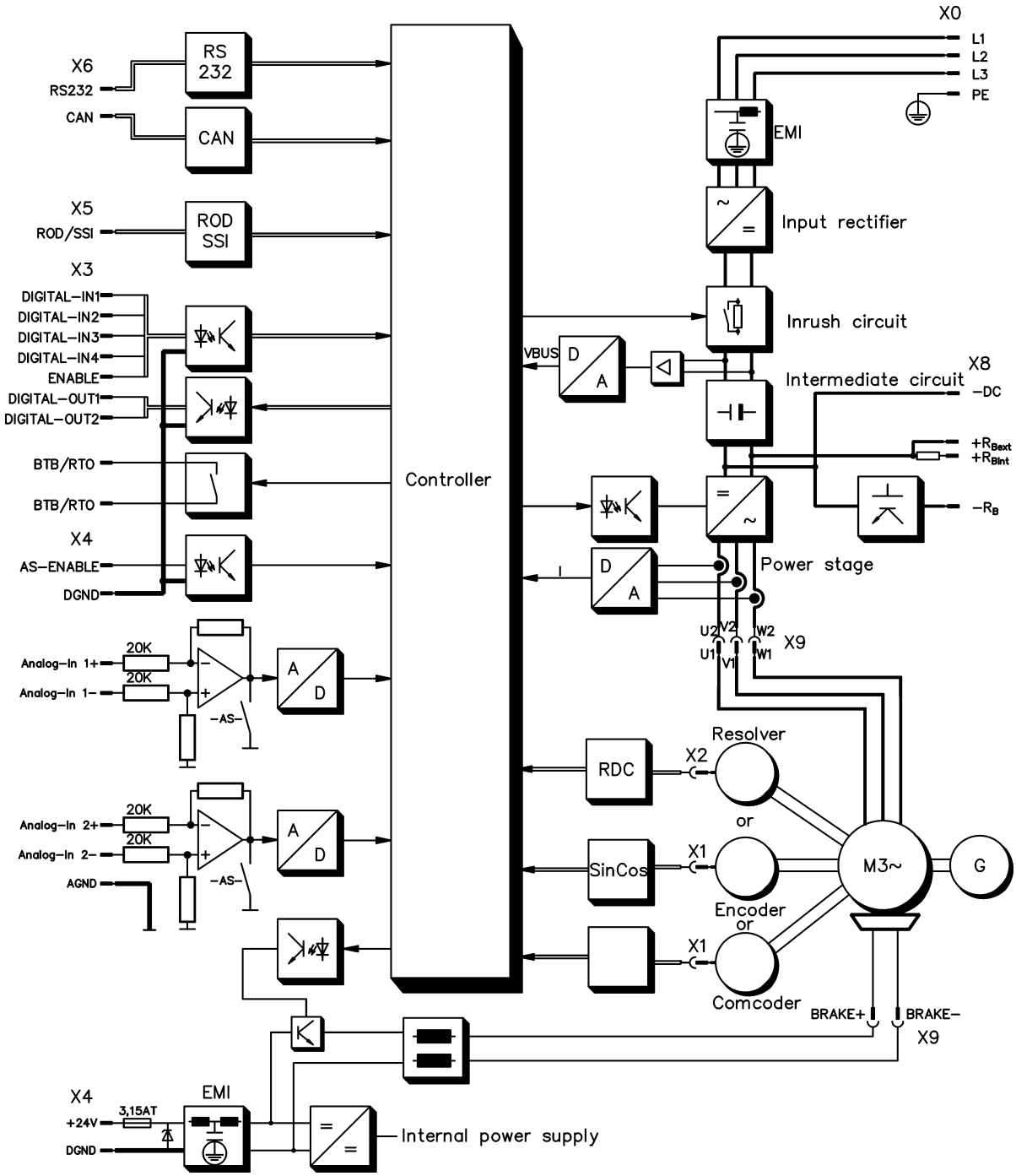

9.2 Block diagram PMCprimo Drive3

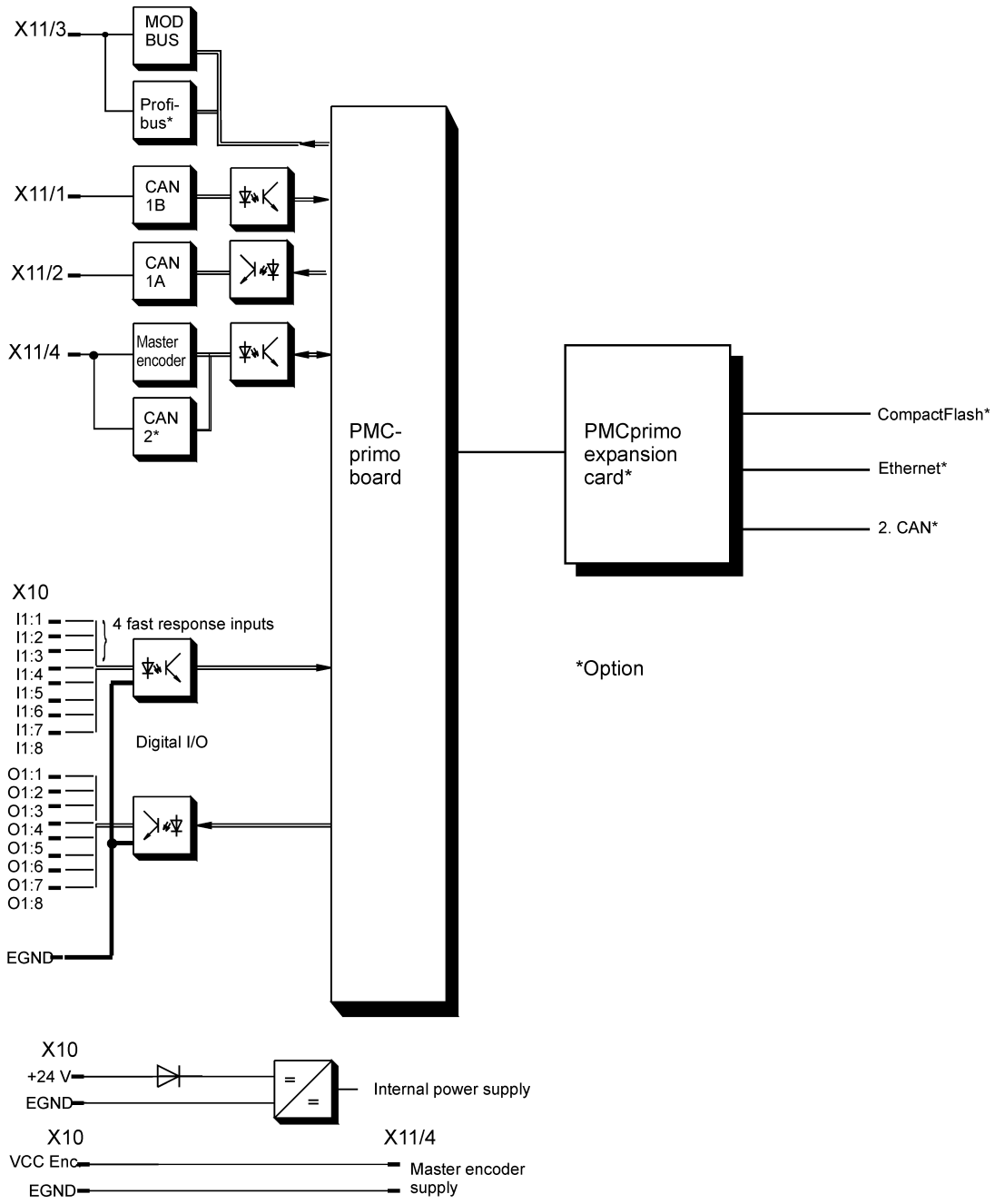

9.3 Electrical supply

9.3.1 Mains electrical supply connection (X0)

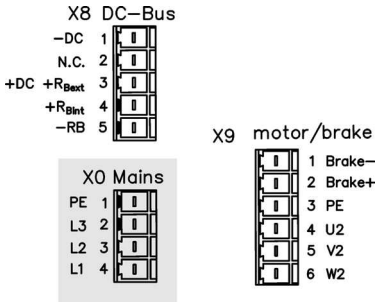

9.3.1.1 Three phase

- Directly to 3-phase supply network, filter is integrated
- Fusing (e.g. fusible cut-outs) to be provided by the user ⇨ p. 21

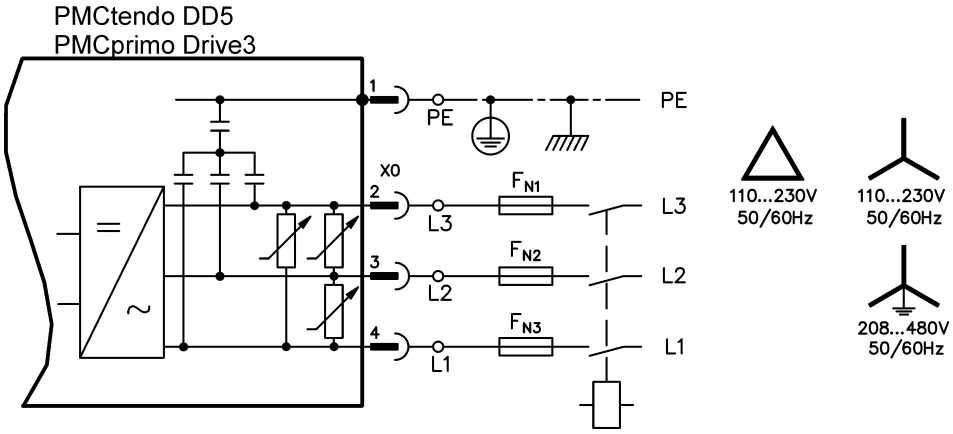

9.3.1.2 Two phase without neutral

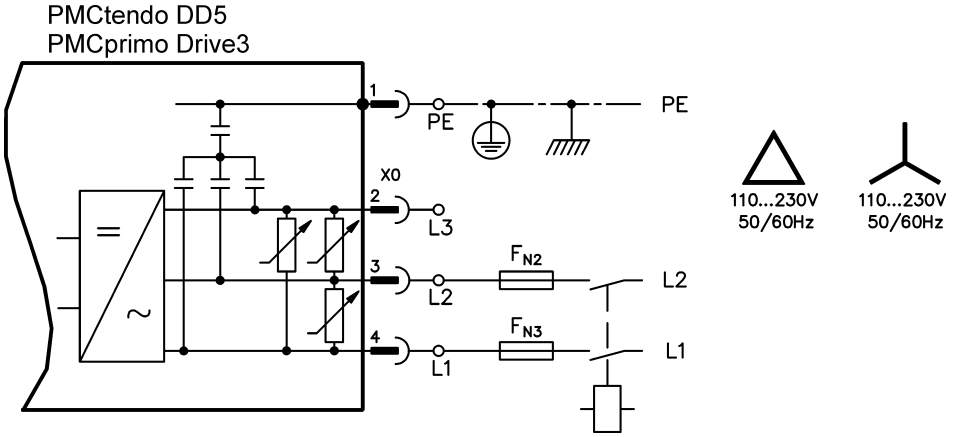

9.3.1.3 *Singel phase with neutral*

PMCtendo DD5
PMCprimo Drive3

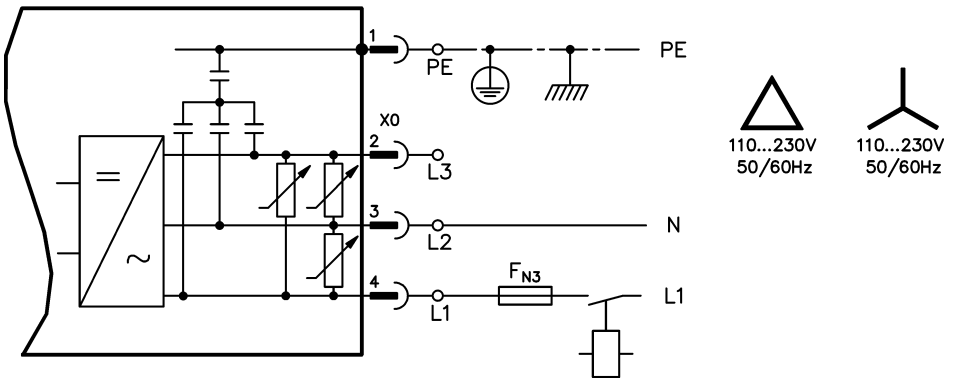

9.3.2 24V auxiliary supply (X4)

- External 24V DC power supply, electrically isolated, e.g. via an isolating transformer
- Required current rating ⇨ p. 19
- Integrated EMC filter for the 24V auxiliary supply

PMCtendo DD5
PMCprimo Drive3

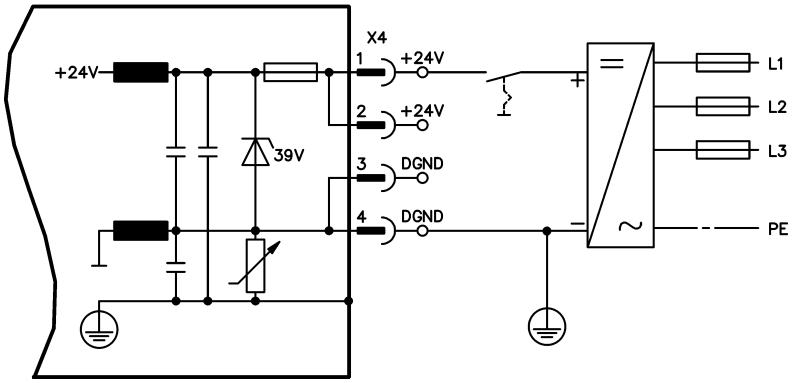

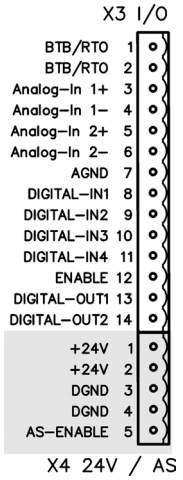

9.3.3 24V supply (X10)

These connectors are available only at a PMCprimo Drive3!

- Electrically isolated, external 24V DC supply, e.g. with insulating transformer
- 24 V can be taken from terminal X4, otherwise external fusing necessary
- Required current rating ⇒ p. 19
- **See important notes to commissioning** ⇒ p. 91

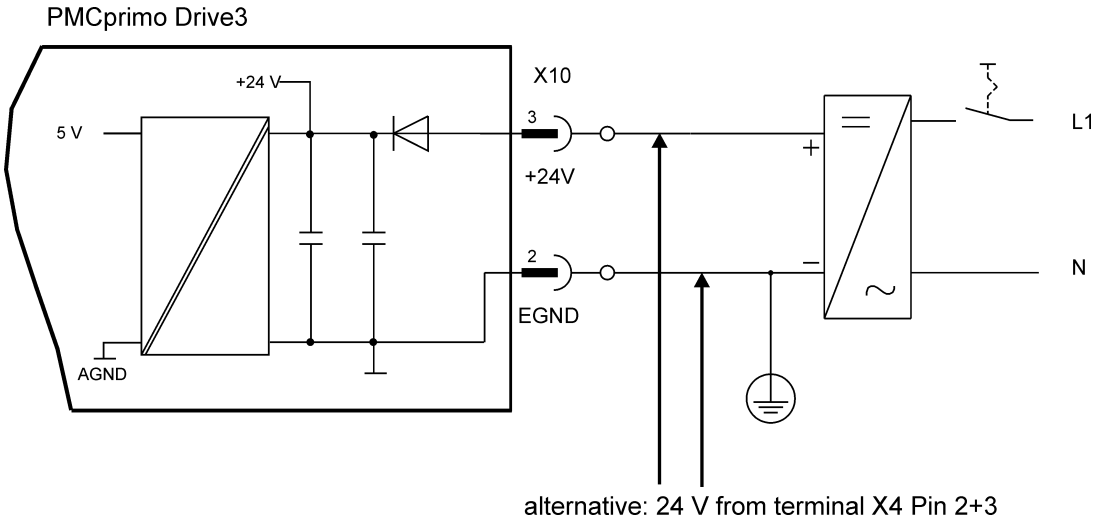

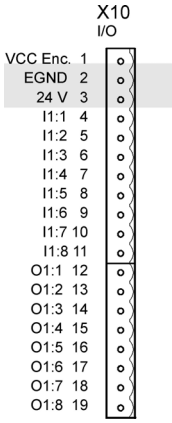

9.3.4 Master encoder supply (X10)

These connectors are available only at a PMCprimo Drive3!

- Individual power supply for the connected encoder
- Voltage range: See encoder datasheet!
- External fusing provided by the user

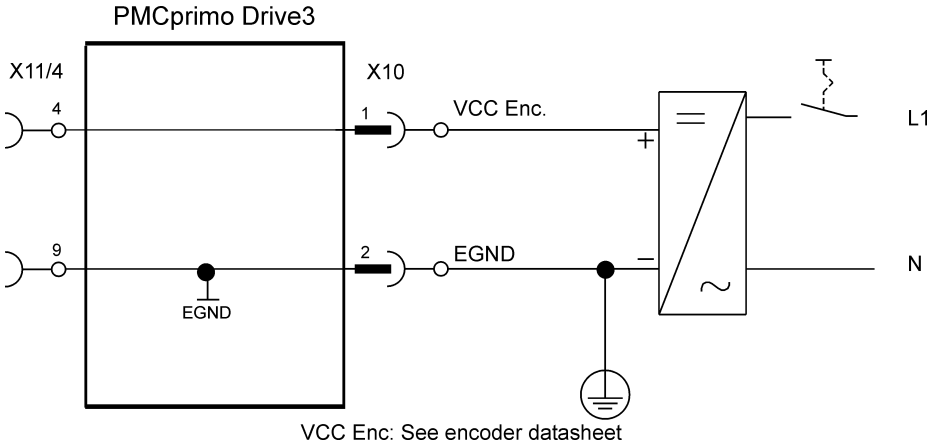

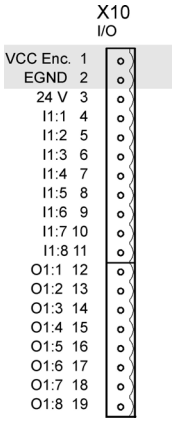

9.3.5 DC bus link (X8)

Terminals X8/1 (-DC) and X8/3 (+RBext). Can be connected in parallel, whereby the regen power is divided between all the amplifiers that are connected to the same DC bus link circuit.

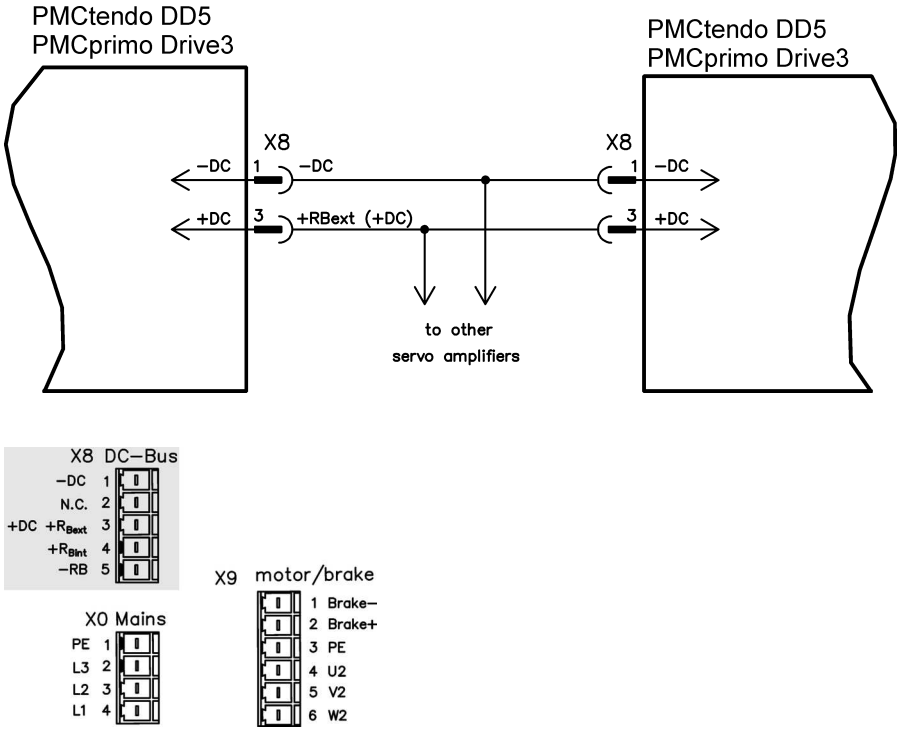

Only servo amplifiers with mains supply from the same mains (identical mains supply voltage) may be connected by the DC bus link.

9.4 Motor connection with brake (X9)

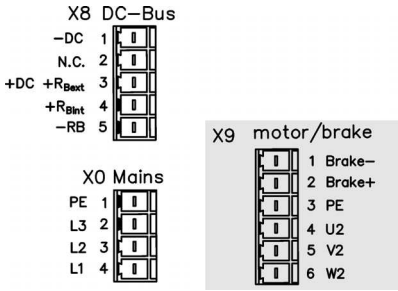

Cable length ≤ 25 meters

PMCtendo DD5
PMCprimo Drive3

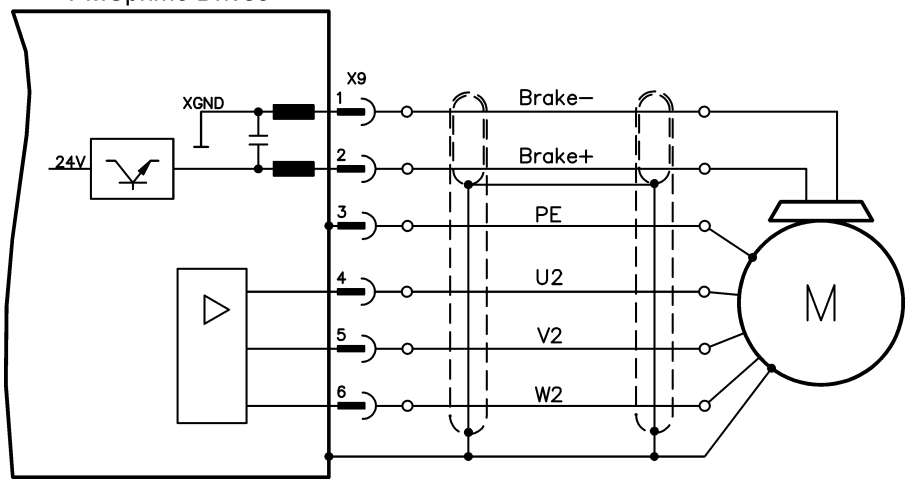

Cable length >25m

PMCtendo DD5
PMCprimo Drive3

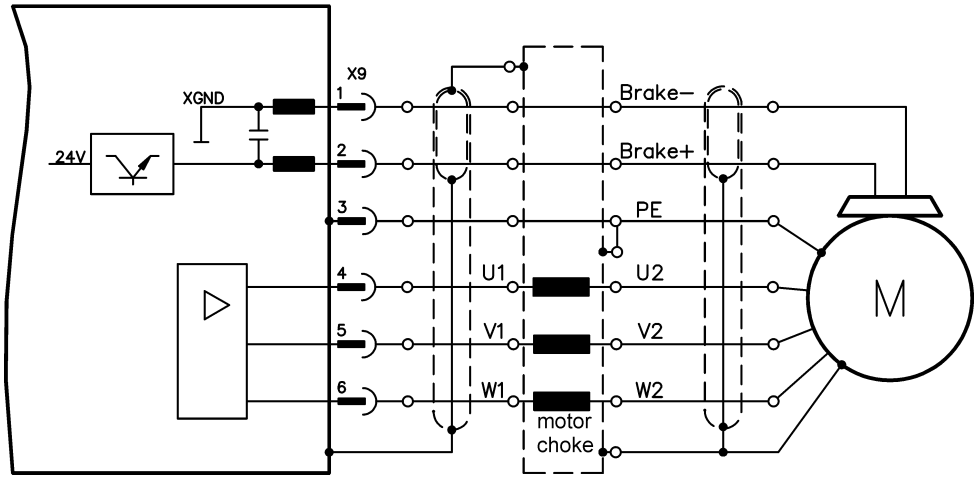

For cable lengths above 25m up to max. 50m, a motor choke must be wired into the motor cable, close to the amplifier.

9.5 External regen restistor (X8)

Remove the plug-in link between the terminals X8/5 (-R_B) and X8/4 (+R_{bint}).

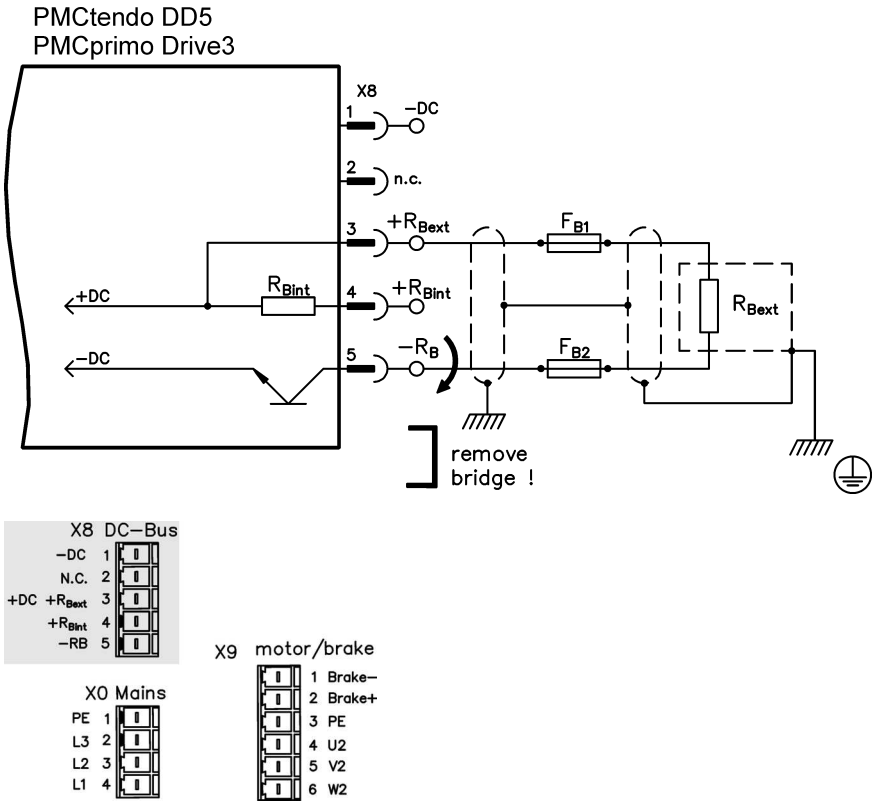

9.6 Feedback

Feedback system	Conn.	See	Remark
Resolver	X2	p. 49	2- to 36 polig
ComCoder	X1	p. 50	A, B, Zero, Hall
Incremental or sine encoder with Hall	X1	p. 51	A, B, Zero, Hall/ Sine, Cosine, Zero, Hall
Sine Encoder with EnDat/HIPERFACE	X1	p. 52	Sine, Cosine, Clock, Data
ACURO Encoder	X1	p. 53	Data (BISS)
Sine encoder without data channel	X1	p. 55	Sine, Cosine, Zero
Incremental encoder (A quad B)	X5	p. 54	A, B, Zero

9.6.1 Resolver (X2)

Our rotatory servomotors PMCtendo AC1/AC2/AC3 are fitted as standard with 2-pole hollow-shaft resolvers. It is possible to connect resolvers with 2 to 36 poles to the PMCtendoDD5 and PMCprimo Drive3. The thermostat contact in the motor is connected via the resolver cable to X2 and evaluated there.
If cable lengths of more than 100 meters are planned, please contact our customer support.

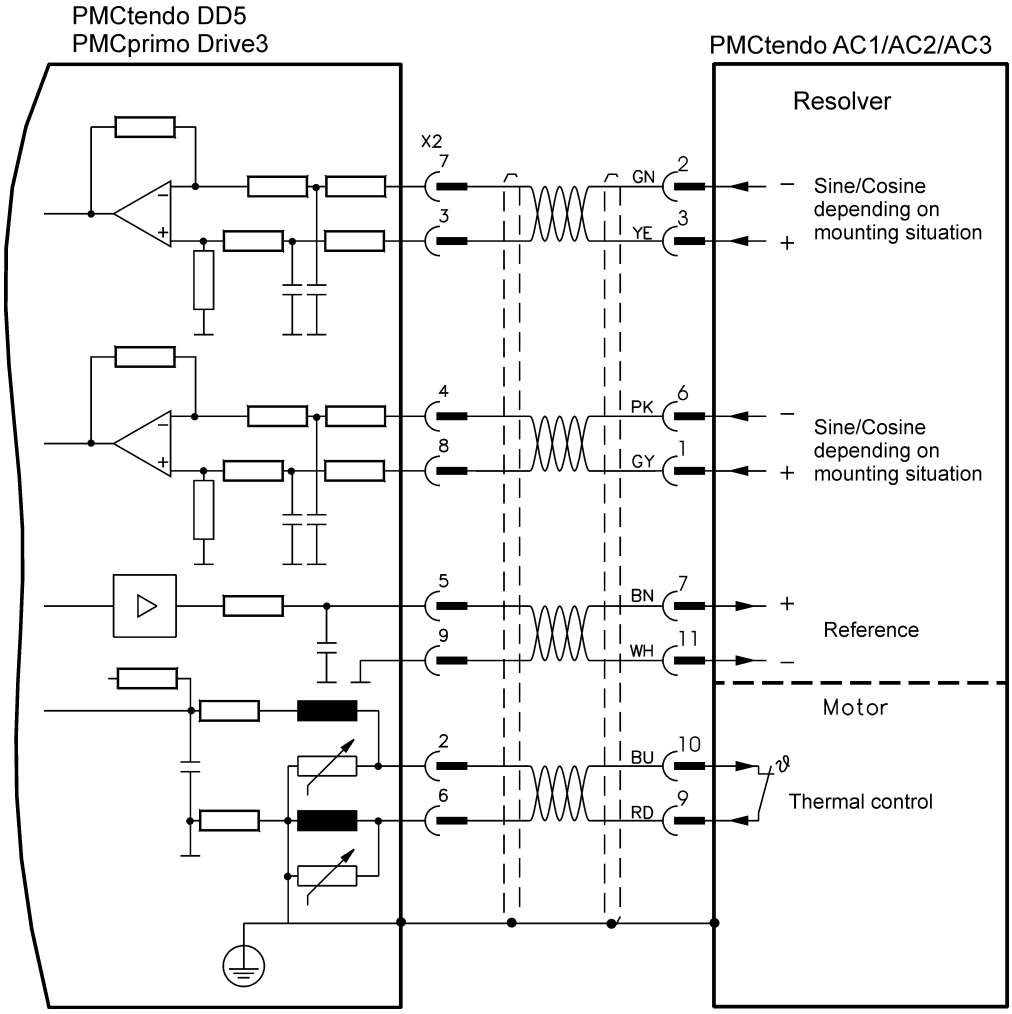

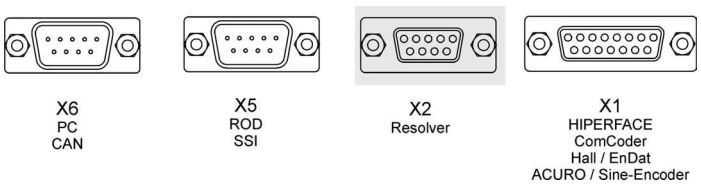

9.6.2 ComCoder (X1)

As an option our motors can be equipped with a ComCoder as feedback unit. For the commutation hall sensors are used and for the resolution an incremental encoder.
The thermostat contact in the motor is connected via the ComCoder cable to X1 and evaluated there.
If cable lengths of more than 25m are planned, please consult our customer service.
Frequency limit (A,B): 350 kHz

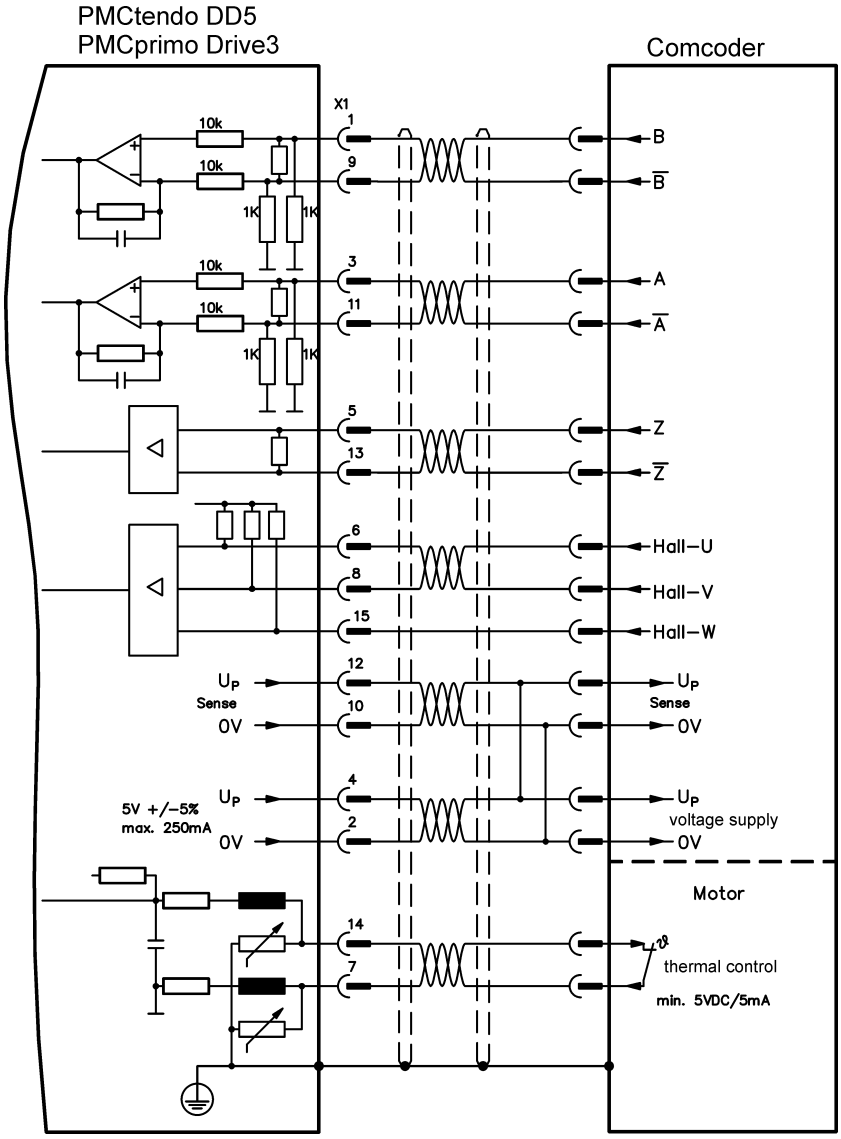

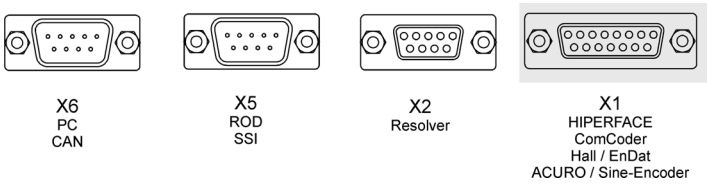

9.6.3 Incremental or Sine Encoder with hall sensors (X1)

Feedback devices (incremental or sine-cosine), which don't deliver an absolute information for commutation, can be used as complete feedback system combined with an additional Hall encoder. All signals are connected to X1.
If cable lengths of more than 25m are planned, please consult our customer service.
Frequency limit (A,B): 350 kHz

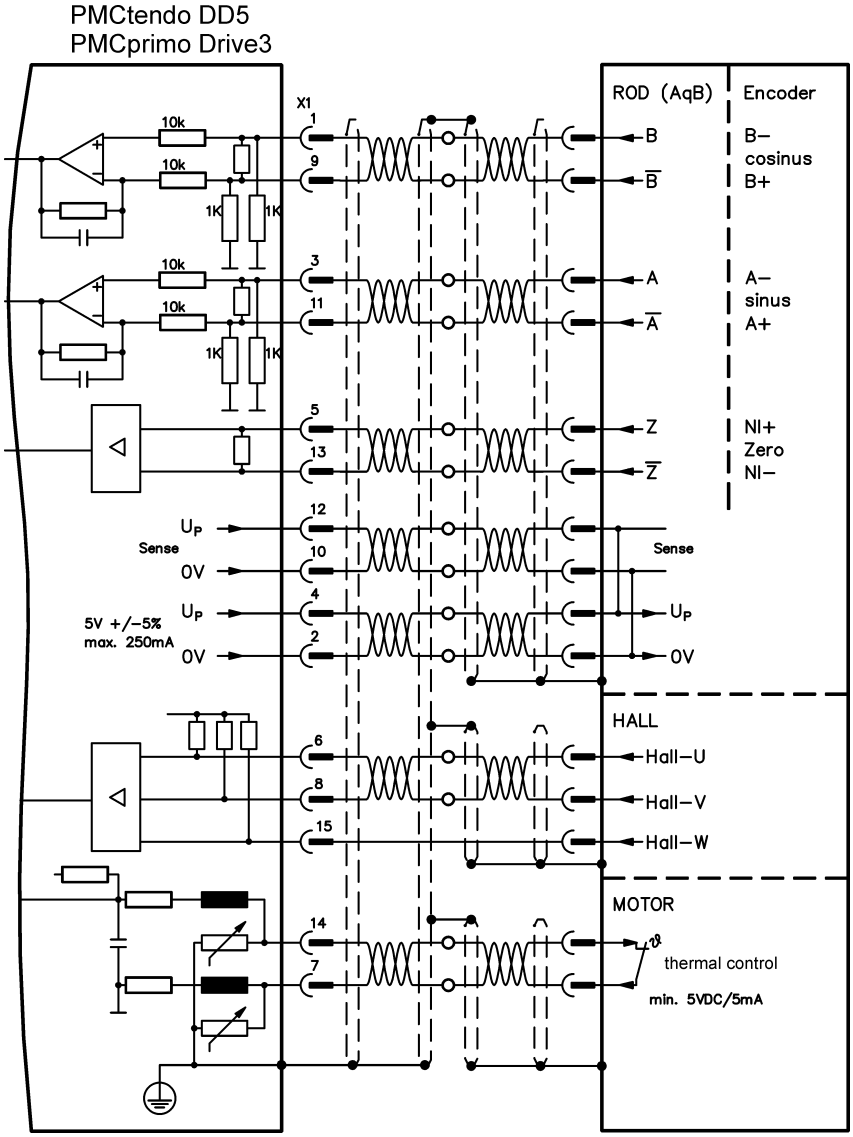

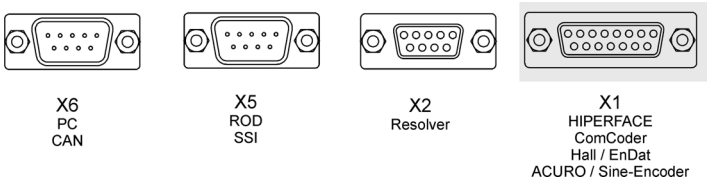

9.6.4 Sine Encoder with EnDat or HIPERFACE (X1)

As an option, our servomotors can be fitted with a single-turn or multi-turn sine-cosine encoder. Preferred types are the ECN1313 and EQN1325 encoders.
The encoder is used by the as a feedback device for drive tasks that require highly precise positioning or extremely smooth running.
The thermostat contact in the motor is connected via the encoder cable to X1 and evaluated there.
If cable lengths of more than 50m are planned, please consult our customer service.
Frequency limit (A,B): 350 kHz

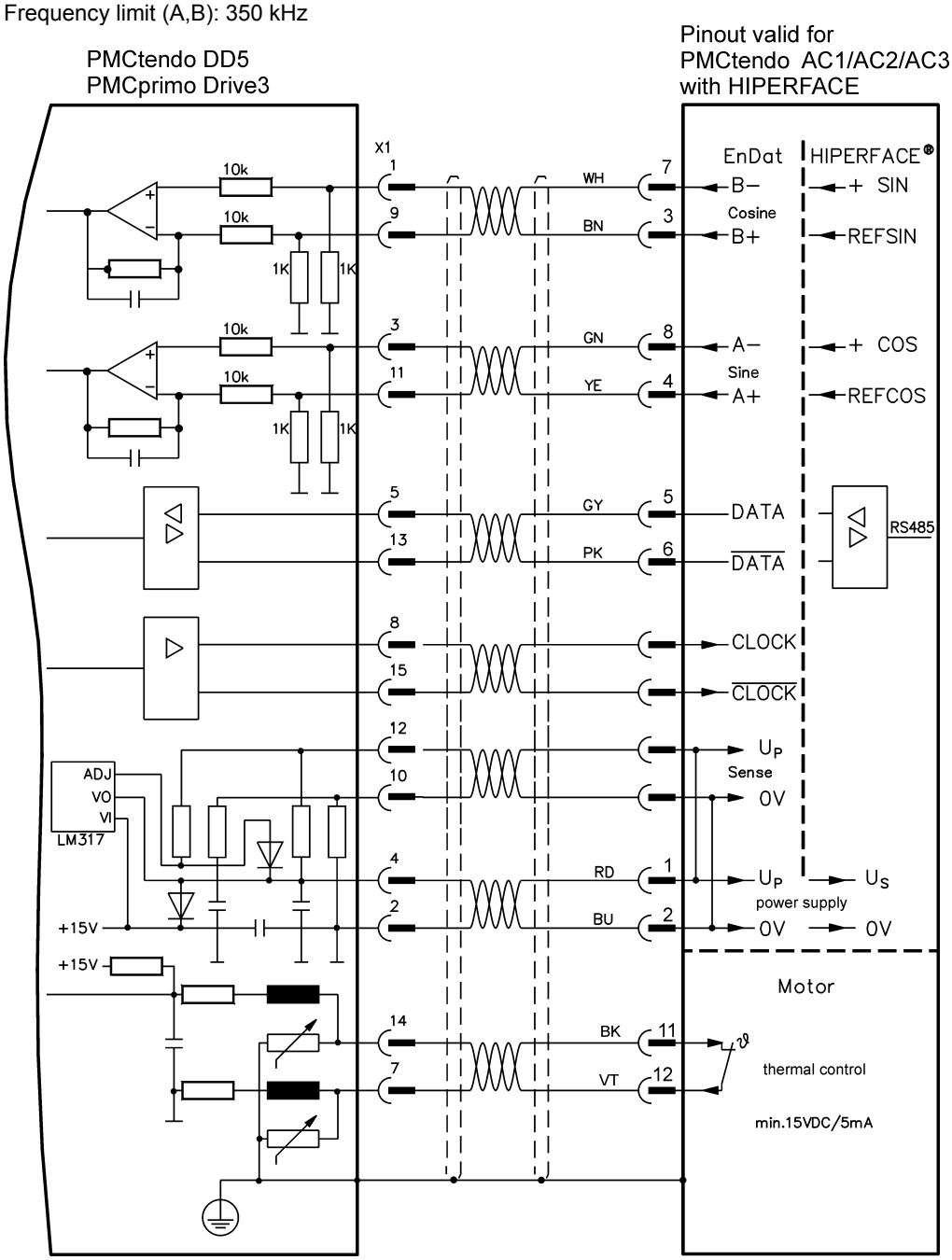

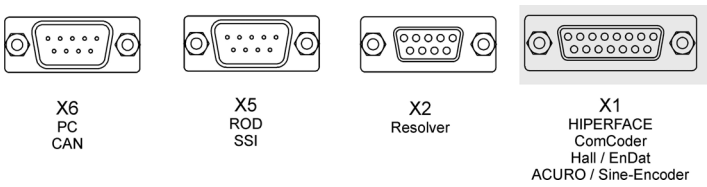

9.6.5 Acuro Encoder, BISS Interface (X1)

As an option, our servomotors can be fitted with a single-turn or multi-turn ACURO encoder with BISS interface.
The encoder is used by the as a feedback device for drive tasks that require highly precise positioning or extremely smooth running.
The thermostat contact in the motor is connected via the encoder cable to X1 and evaluated there.
If lead lengths of more than 50m are planned, please consult our customer service.

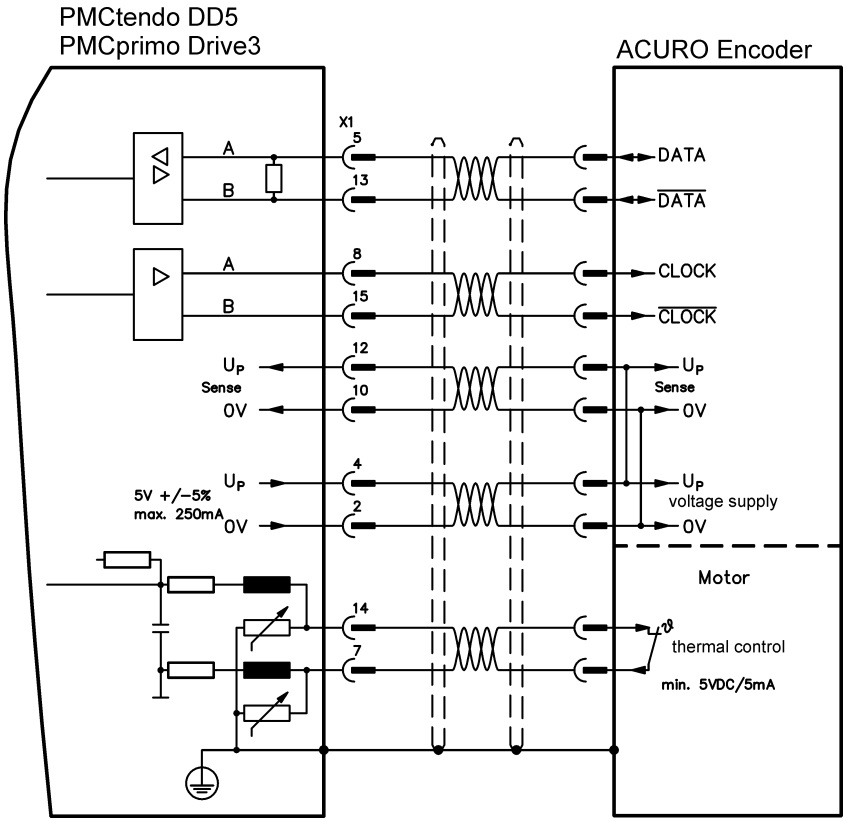

9.6.6 Incremental encoder (X5)

An incremental encoder can be used as standard motor feedback.
Select feedback type 19 "ROD 5V with W&S". Drive executes wake&shake to calculate the necessary start-up information for the position controller every time the 24V auxiliary voltage is switched on.
If lead lengths of more than 50m are planned and for questions concerning the power supply of the encoder, please consult our customer service.
The thermostat contact in the motor is connected to X1 (see p.50) or X2 (see p.49).

Frequency limit: 1.5 MHz

Don't use this feedback type with vertical load (hanging load).

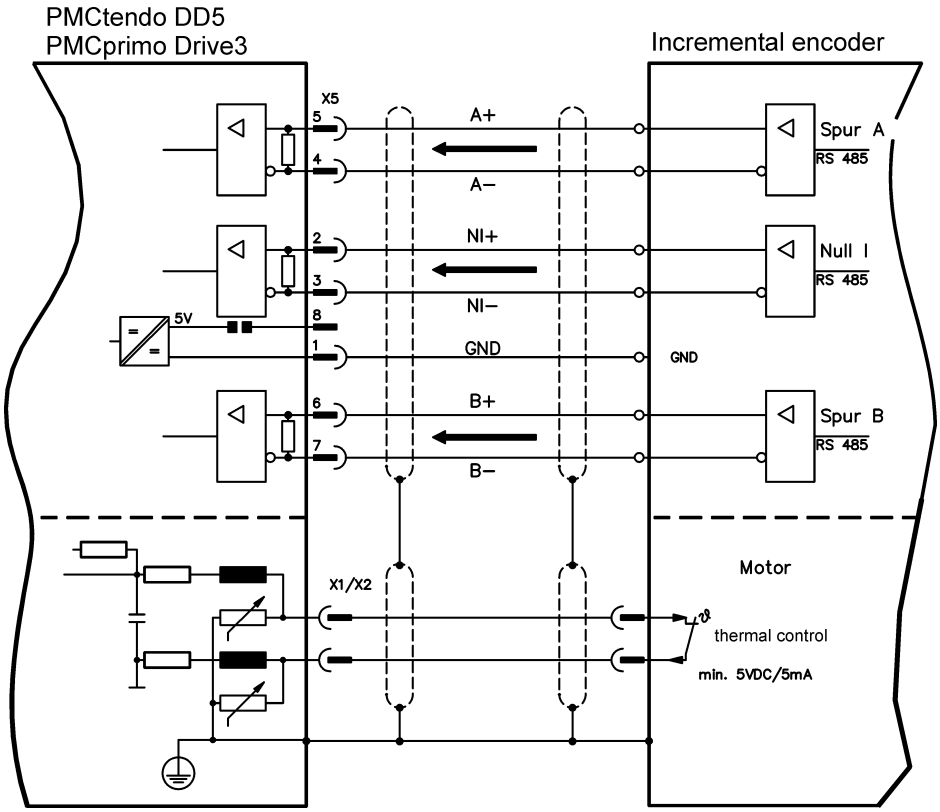

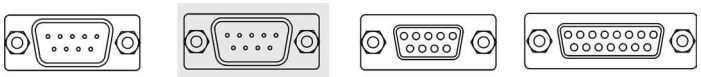

X6
PC
CAN

X5
ROD
SSI

X2
Resolver

X1
HIPERFACE
ComCoder
Hall / EnDat
ACURO / Sine-Encoder

9.6.7 Sine Encoder without data channel (X1)

An sine-cosine encoder without data channel can be used as standard motor feedback. Select feedback type 7 "SinCos 5V with W&S". Drive executes wake&shake to calculate the necessary start-up information for the position controller every time the 24V auxiliary voltage is switched on.
The thermostat contact in the motor is connected via the encoder cable to X1 and evaluated there.
If lead lengths of more than 50m are planned, please consult our customer service.
Frequency limit: 350 kHz

Don't use this feedback type with vertical load (hanging load).

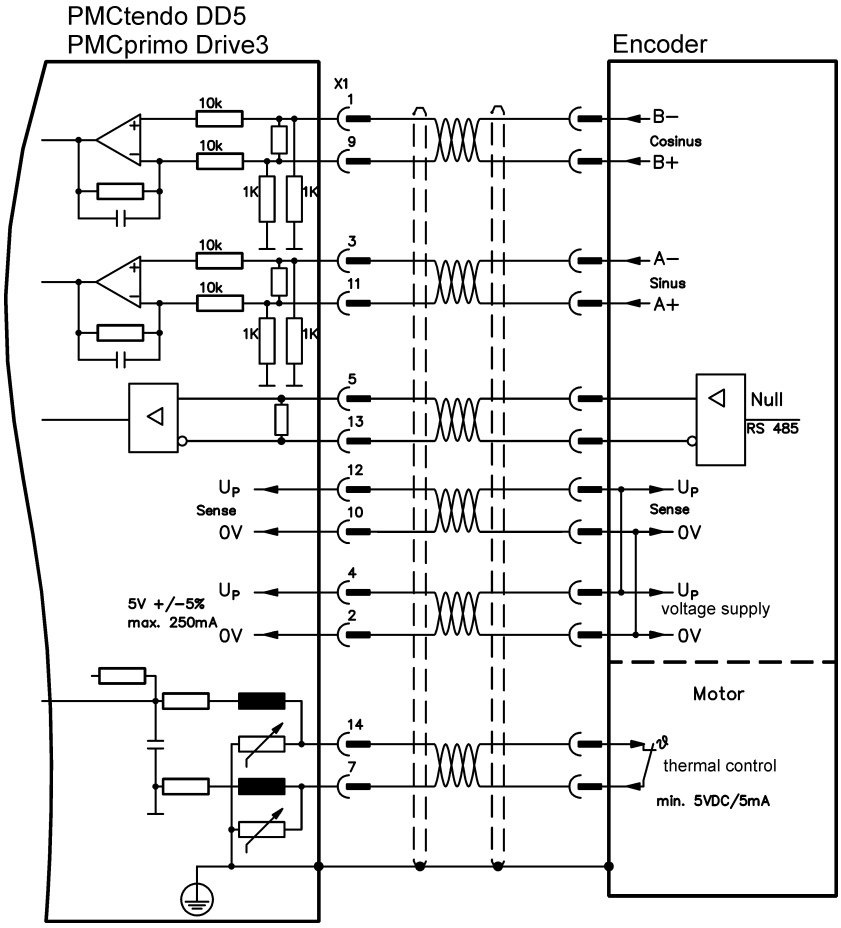

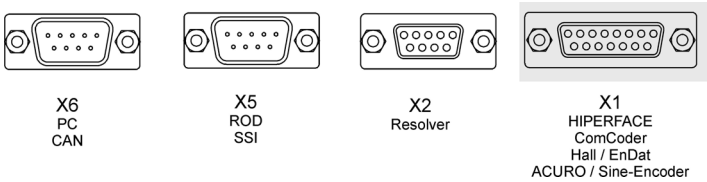

9.7 Digital and analog inputs and outputs

9.7.1 Analog inputs (X3)

The servo amplifier is fitted with two **programmable** differential inputs for analog setpoints. AGND (X3/7) must always be joined to the GND of the controls as a ground reference.

9.7.1.1 Technical characteristics

- Differential input voltage max. ± 10 V
- Ground reference AGND, terminal X3/7
- Input resistance 10 kΩ
- Common-mode voltage range for both inputs ± 10 V
- Update rate: 62,5 µs

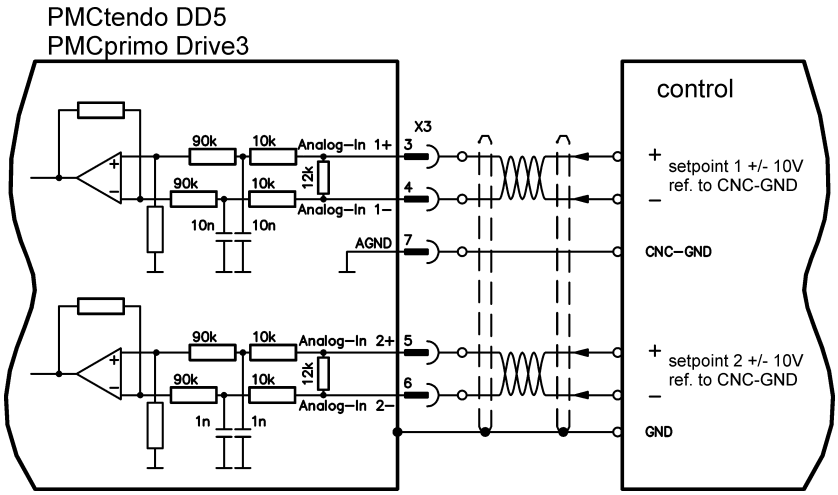

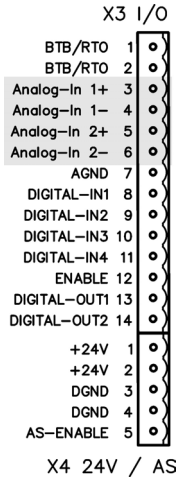

9.7.1.2 Analog-In 1 input (terminals X3/3-4)

Differential input voltage max. ± 10 V, resolution 14-bit, scalable.
Standard setting: speed setpoint (PMCtendo DD5 only)

9.7.1.3 Analog-In 2 input (terminals X3/5-6)

Differential input voltage max. ± 10 V, resolution 12-bit, scalable.
Standard setting: torque setpoint (PMCtendo DD5 only)

Application examples for setpoint input Analog-In 2 (PMCtendo DD5 only):

- adjustable external current limit
- reduced-sensitivity input for setting-up/jog operation
- pre-control / override

9.7.1.4 Defining the direction of rotation (PMCtendo DD5 only)

Standard setting : clockwise rotation of the motor shaft (looking at the shaft end)

- Positive voltage between terminal X3/3 (+) and terminal X3/4 (-) or
- Positive voltage between terminal X3/5 (+) and terminal X3/6 (-)

To reverse the direction of rotation, swap the connections to terminals X3/3-4 or X3/5-6 respectively, or change the ROTATION DIRECTION parameter in the “Position controller” screen page.

9.7.2 Digital Inputs (X3/X4)

All digital inputs are **electrically isolated** via optocouplers.

9.7.2.1 Technical characteristics

- Ground reference is **Digital**-GND (DGND, terminals X4/3 and X4/4)
- The inputs at X3 are **PLC-compatible** (IEC 61131-2 Type 1)
  High: 11...30 V / 2...11 mA , Low: -3...5 V / <1mA
- Update rate Software: 250 µs / Hardware: 2µs

PMCtendo DD5
PMCprimo Drive3

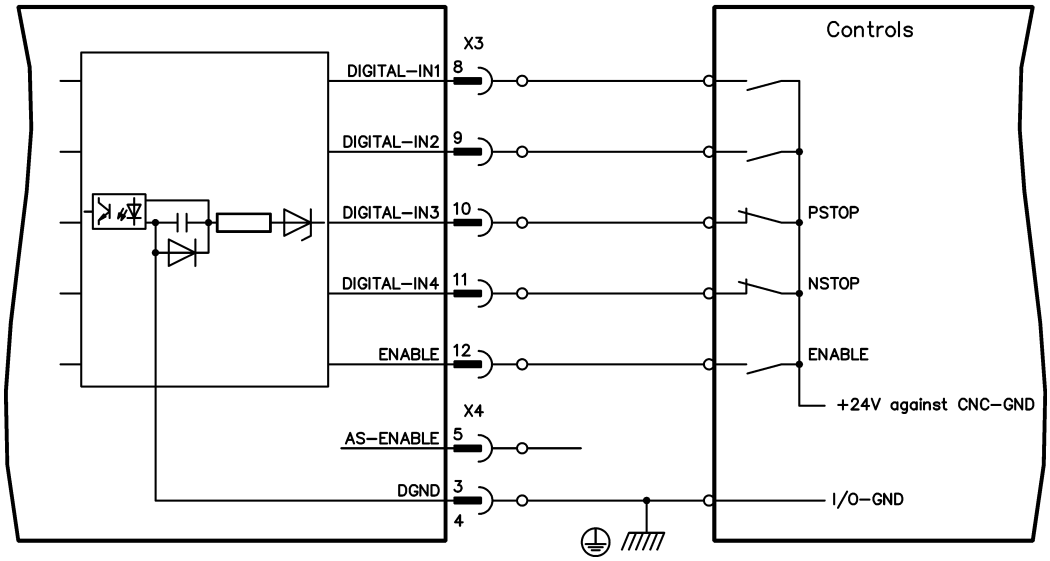

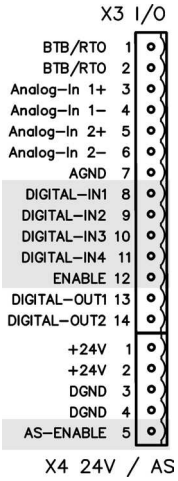

9.7.2.2 *ENABLE input*

The output stage of the servo amplifier is enabled by applying the ENABLE signal (terminal X3/12, 24V input, **active high**).
In the disabled state (low signal) the connected motor has no torque.

9.7.2.3 *AS-ENABLE input*

An additional digital input (AS-Enable) releases the power output stage of the amplifier as long as a 24V signal is applied to this input. If the AS-Enable input goes open-circuit, then power will no longer be supplied to the motor, the drive will lose all torque and coast down to a stop. A fail-safe brake function for the drive, if one is required, must be ensured through a mechanical brake since electrical braking with the aid of the drive is no longer possible.
You can thus achieve a restart lock-out for personnel safety by using the AS-enable input in conjunction with an external safety circuit.
You can find further information and connection examples on page 85.

This input is not compatible with IEC 61131-2

9.7.2.4 *Programmable digital inputs*

You can use the DIGITAL-IN1 to DIGITAL-IN4 digital inputs to initiate pre-programmed functions that are stored in the servo amplifier.
A list of these pre-programmed functions can be found on the “Digital I/O” screen page of our setup software **PDrive**.
If an input was freshly assigned to a pre-programmed function, then the data set must be saved in the EEPROM of the servo amplifier and a reset has to be carried out (with the amplifier setup software **PDrive** for example).

Note for a PMCprimo Drive3:

The digitale inputs DIGITAL-IN1 to DIGITAL-IN4 are denoted as E2:1 to E2:4 on a PMCprimo Drive3.

9.7.3 Digital Inputs I1:1 - I1:8 (X10)

These inputs are available only at a PMCprimo Drive3!

All digital inputs are electrically isolated through optocouplers.

9.7.3.1 Technical characteristics

- Reference ground is EGND (terminal X10, Pin 2)
- Logic **is PLC compatible**
- HIGH level: +11..24V / 10 mA – LOW level: 0 V .. 11 V/ 0 mA
- The inputs I1:1 to I1:4 are „fast“ inputs (< 1 us) for e.g. product referencing
- I1:1 and I1:2 will be additionally mapped to both inputs E2:7 and E2:8 (see PMCprimo programming manual).

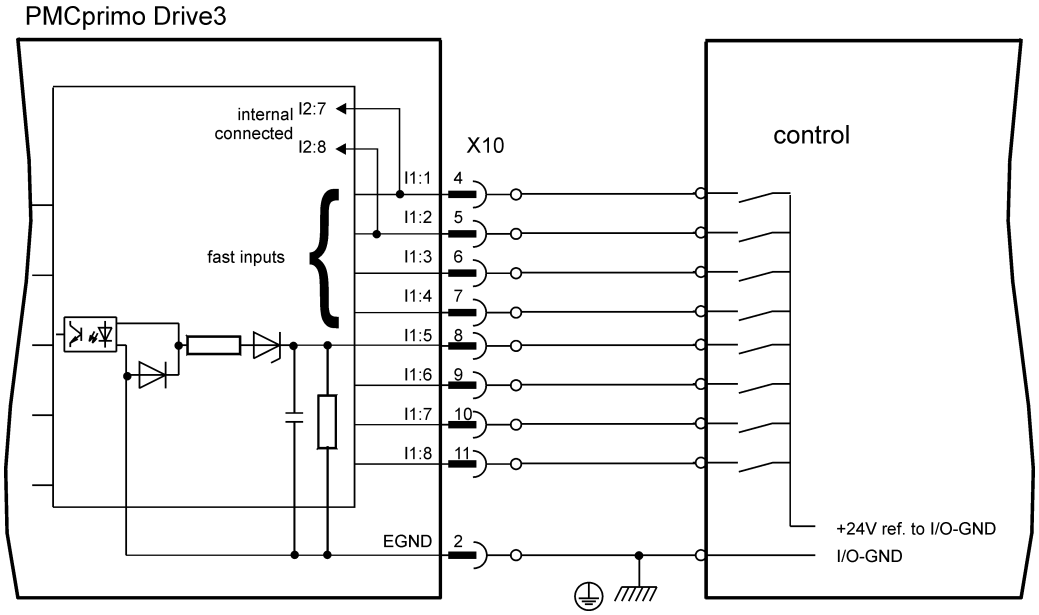

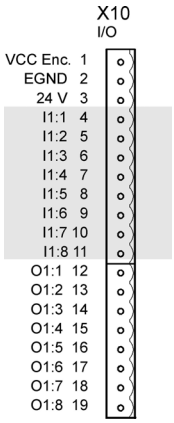

9.7.3.2 Fast inputs I1:1 to I1:4

These four fast inputs can be used for special functions like referencing and initialisation. Addidional information can be found in the PMCprimo programming manual.

9.7.4 Digital outputs (X3)

All digital outputs are electrically isolated through optocouplers.

9.7.4.1 Technical characteristics

- Ground reference is Digital-GND (DGND, terminals X4/3 and X4/4)
- DIGITAL-OUT1 and 2 : Open Emitter, max. 30V DC, 10mA
- BTB/RTO : Relay output, max. 30V DC or 42V AC, 0.5A
- Update rate : 250 µs

PMCtendo DD5
PMCprimo Drive3

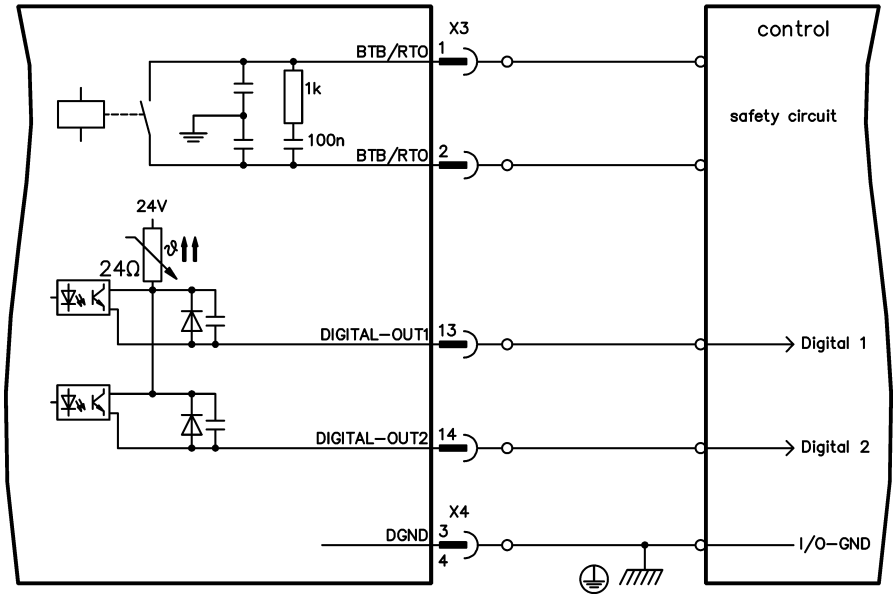

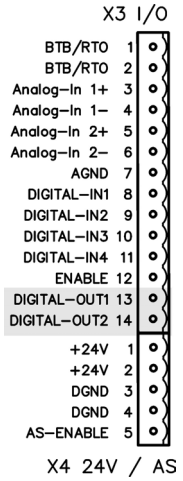

9.7.4.2 *Ready-to-operate contact BTB/RTO*

Operational readiness (terminals X3/1 and X3/2) is signaled by a floating relay contact.
The contact is closed when the servo amplifier is ready for operation, and the signal is not influenced by the enable signal, the I²t-limit, or the regen threshold.

All faults cause the BTB/RTO contact to open and the output stage to be switched off (if the BTB/RTO contact is open, the output stage is inhibited -> no power output). A list of the error messages can be found on page 98.

9.7.4.3 *Programmable digital outputs DIGITAL-OUT 1 / 2*

You can use the digital outputs DIGITAL-OUT1 (terminal X3/13) and DIGITAL-OUT2 (terminal X3/14) to output messages from pre-programmed functions that are stored in the servo amplifier.
A list of these pre-programmed functions can be found on the “I/O digital” screen page of our setup software **PDrive**.

If an input is to be freshly assigned to a pre-programmed function, then the parameter set must be saved in the EEPROM of the servo amplifier and a reset has to be carried out (with the amplifier setup software **PDrive**).

9.7.5 Digital outputs (X10)

These outputs are available only at a PMCprimo Drive3!

All digital outputs are electrically isolated through optocouplers.

9.7.5.1 Technical characteristics

- Reference ground is EGND (terminal X10, pin 2)
- All digital outputs are overload- and shortcircuit protected
- „High side“ outputs: 24V /0,1 A each output

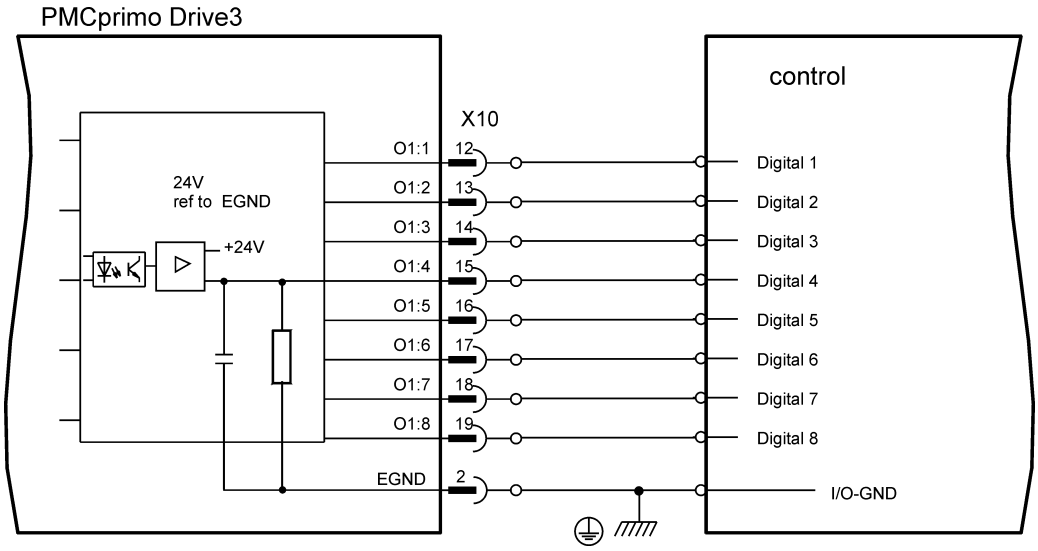

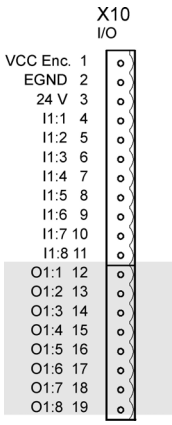

9.7.5.2 Application example

The digital outputs can be used for CAM functions or timer outputs. More information can be found in the PMCprimo programming manual.

9.8 Encoder emulation

9.8.1 Incremental encoder output - A quad B (X5)

The incremental-encoder interface is part of the standard package. Select encoder function ROD (A Quad B) Encoder (“Encoder” screen page). The servo amplifier calculates the motor shaft position from the cyclic- absolute signals of the resolver or encoder, generating incremental-encoder compatible pulses from this information. Pulse outputs on the SubD connector X5 are 2 signals, A and B, with 90° phase difference (i.e. in quadrature, hence the alternative term “A quad B” output), with a zero pulse.
The resolution (before multiplication) can be set by the RESOLUTION function:

Enc. function (ENCMODE)	Feedback system	Resolution (lines)	Zero pulse (NI)
ROD (1)	Resolver	16...1024	once per turn (only at A=B=1)
	EnDat / HIPERFACE	16...4096 and 8192...524288 (2^n)	once per turn (only at A=B=1)
ROD interpolation (3)	Inkremental encoder without data channel	2^2...2^7 (multiplication) TTL line x encoder resolution	encoder sognal passed through X1 to X5

Use the NI-OFFSET parameter to adjust + save the zero pulse position within one mechanical turn. The drivers operate off an internal supply voltage. **The maximum permissible cable length is 100 meters.**

9.8.1.1 Connections and signals for the incremental encoder interface

Default count direction: UP when the motor shaft is rotating clockwise (looking at the shaft's end)

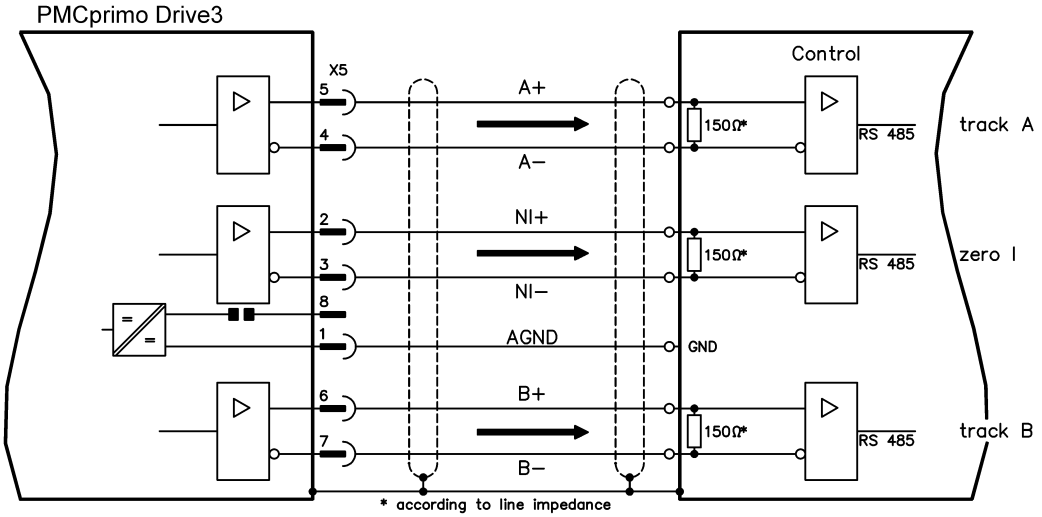

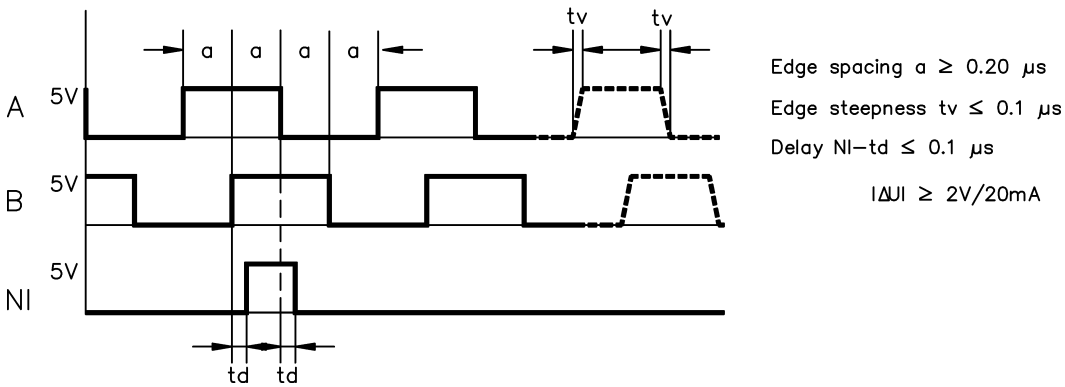

9.8.2 SSI output (X5)

The SSI interface (synchronous serial absolute-encoder emulation) is part of the standard package. Select encoder function SSI (“Encoder” screen page). The servo amplifier calculates the motor shaft position from the cyclic-absolute signals of the resolver or encoder. From this information a SSI date (Stegmann patent specification DE 3445617C2) is provided. Max 32 bits are transferred. The leading data bit contains the number of revolutions and are selectable from 12 to 16 bits. The following max. 16 bits contain the resolution and are not variable.

The following table shows the allocation of the SSI date depending upon selected number of revolutions:

	Resolution																Resolution (variable)															
	SSIREVOL																															
Bit	15	14	13	12	11	10	9	8	7	6	5	4	3	2	1	0	15	14	13	12	11	10	9	8	7	6	5	4	3	2	1	0
	14		13	12	11	10	9	8	7	6	5	4	3	2	1	0																
	13			12	11	10	9	8	7	6	5	4	3	2	1	0																
	12				11	10	9	8	7	6	5	4	3	2	1	0																
	11					10	9	8	7	6	5	4	3	2	1	0																

The signal sequence can be output in **Gray** code or in **Binary** (standard) code.
The servo amplifier can be adjusted to the clock frequency of your SSI-evaluation with the setup software **PDrive** (cycle time 1,3 µs or 10 µs).
The drivers operate off an internal supply voltage.

9.8.2.1 Connection and signals for the SSI interface

Default count direction: UP when the motor shaft is rotating clockwise (looking at the end of the motor shaft).

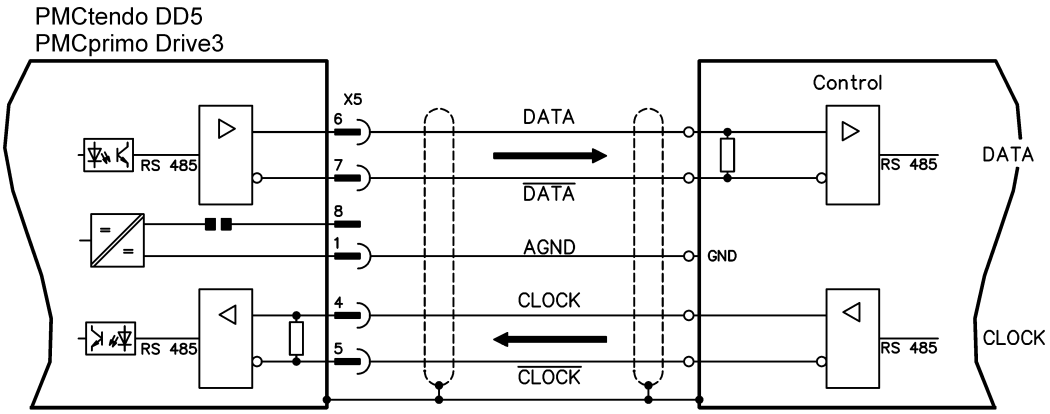

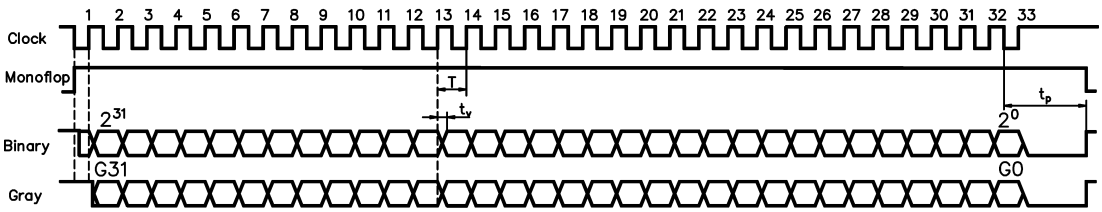

Switch over time Data $t_v \leq$ 300nsec
Period T = 600 ns
Time Out t_p = 1.3µs/10µs (SSITOUT)

Output $|\Delta U| \geq$ 2V/20mA
Input $|\Delta U| \geq$ 0.3V

9.9 Master-slave operation, encoder master control

These function is available only at a PMCtendo DD5!

This interface can be used to link several amplifiers together in master-slave operation. Parameter setting for the slave amplifier is carried out with the aid of the setup software (electrical gearing). The resolution (no. of pulses/turn) can be adjusted, and the analog setpoint inputs are out of action.

9.9.1.1 Signal diagram (for encoders with RS422 or 24V output)

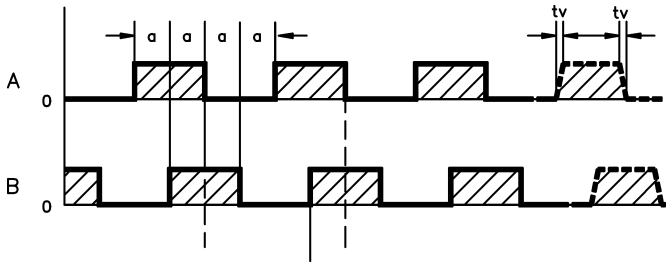

9.9.2 Connection to a PMCtendo DD5 master, 5V signal level (X5)

This interface can be used to link several amplifiers together in master-slave operation. Up to 16 slave amplifiers can be controlled by the master, via the encoder output. The SubD connector X5 is used for this purpose.
Frequency limit: 1.5 MHz, transition time tv ≤ 0.1µs

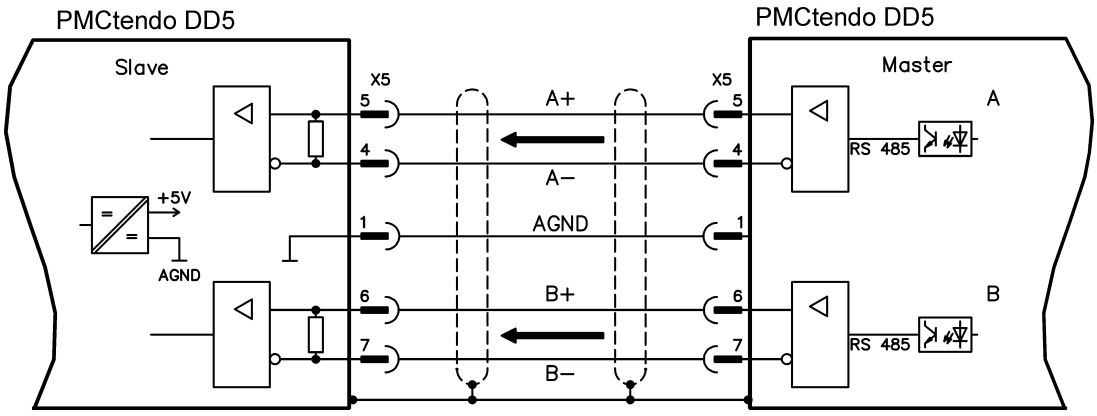

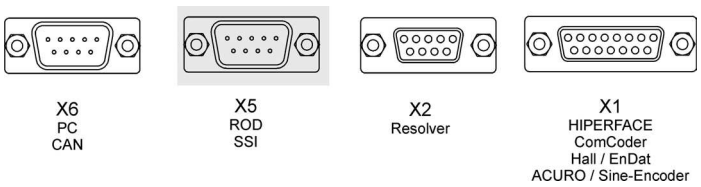

9.9.3 Connection to incremental encoder master with 24V signal level (X3)

This interface can be used to operate the PMCtendo DD5 as a slave, mastered by an encoder with a 24V signal level (master-slave operation).
This uses the digital inputs DIGITAL-IN 1 and 2 on connector X3.
Frequency limit: 100 kHz, transition time tv ≤ 0.1µs

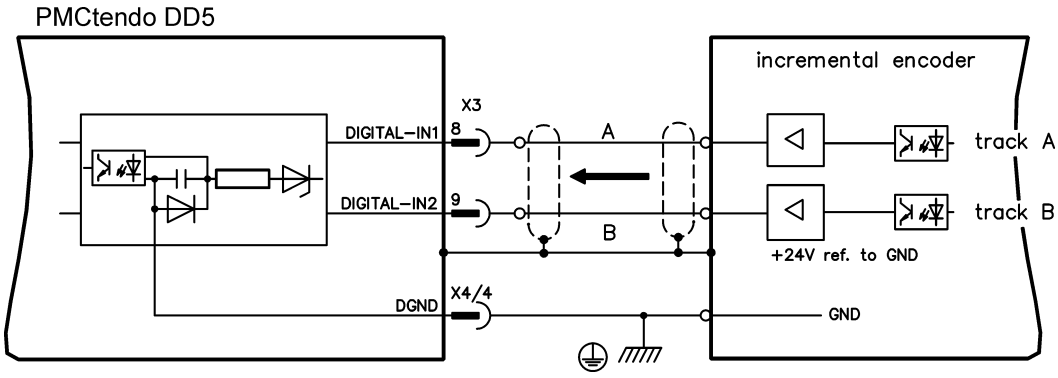

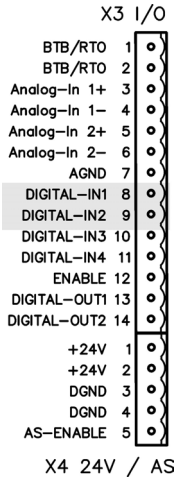

9.9.4 Connection to a sine encoder master (X1)

This interface can be used to operate the PMCtendo DD5 as a slave, mastered by a sine-cosine encoder (master-slave operation). This uses the SubD connector X1.
Frequency limit (A, B): 350 kHz

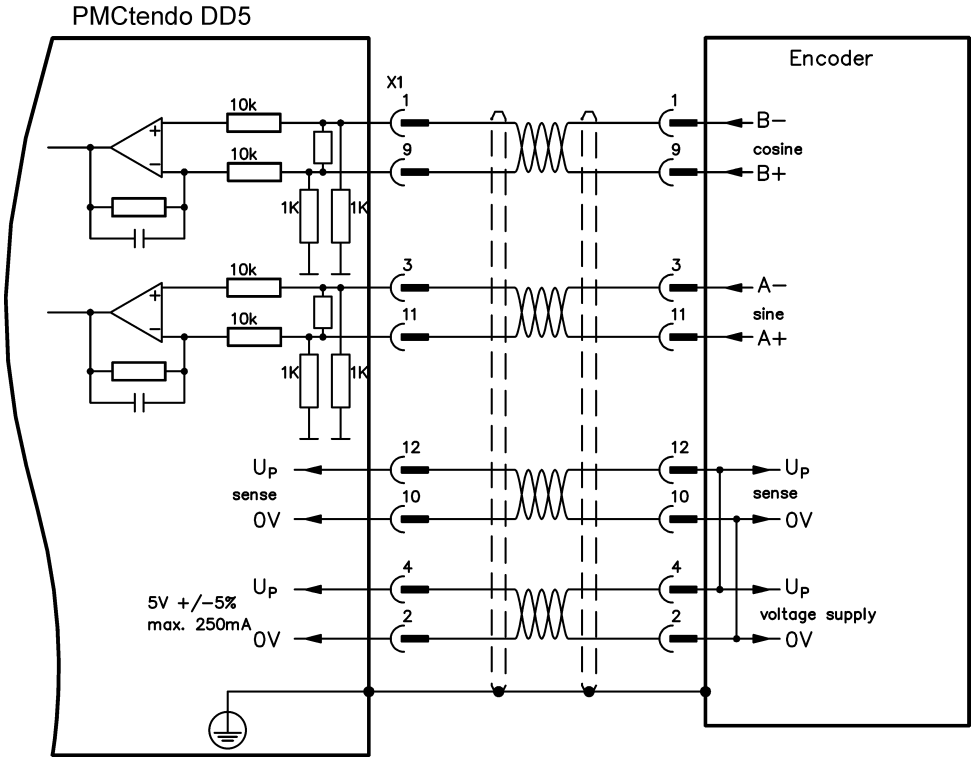

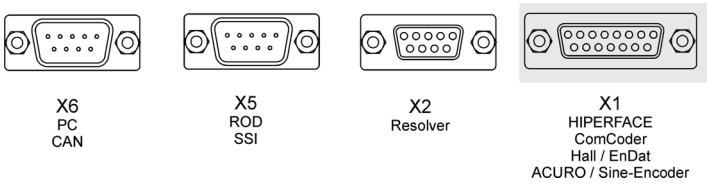

9.10 Interface for stepper motor controllers (step and direction)

These function is available only at a PMCtendo DD5!

This interface can be used to connect the servo amplifier to a third-party stepper-motor controller. Parameter setting for the slave amplifier is carried out with the aid of the setup software (electrical gearing). The number of steps can be adjusted, so that the servo amplifier can be adapted to match the step-direction signals of any stepper controller. Various monitoring signals can be generated.
The analog inputs are out of action.

9.10.1 Speed profile and signal diagram

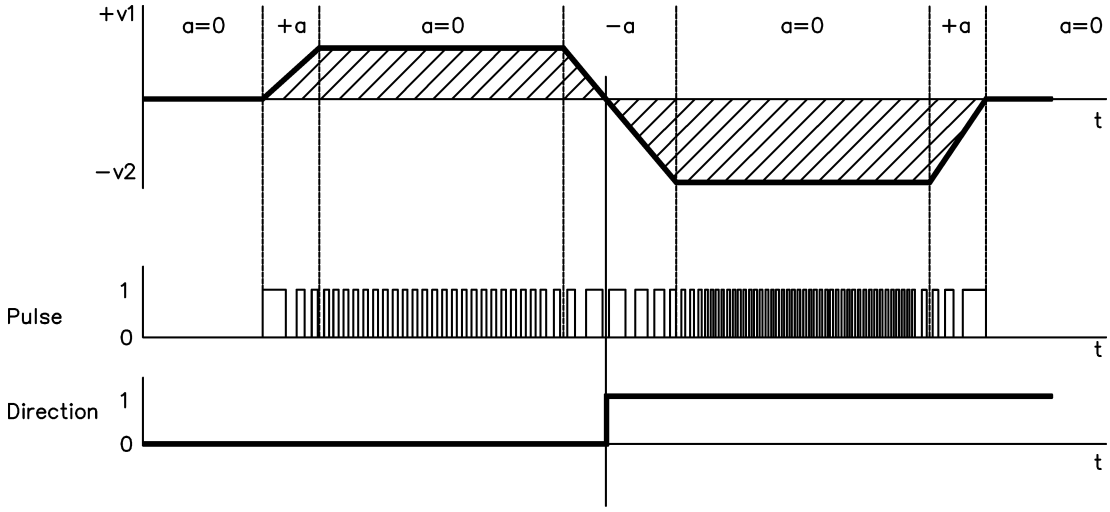

Equivalences
path traversed s —— number of pulses
velocity v —— pulse frequency
acceleration a —— rate of change of pulse frequency

Note:

Using an A quad B encoder provides better EMC noise immunity.

9.10.2 Connection to a stepper controller with 5V signal level (X5)

This interface can be used to connect the servo amplifier to a stepper-motor controller with a 5V signal level. It uses the SubD connector X5.
Frequency limit: 1.5 MHz

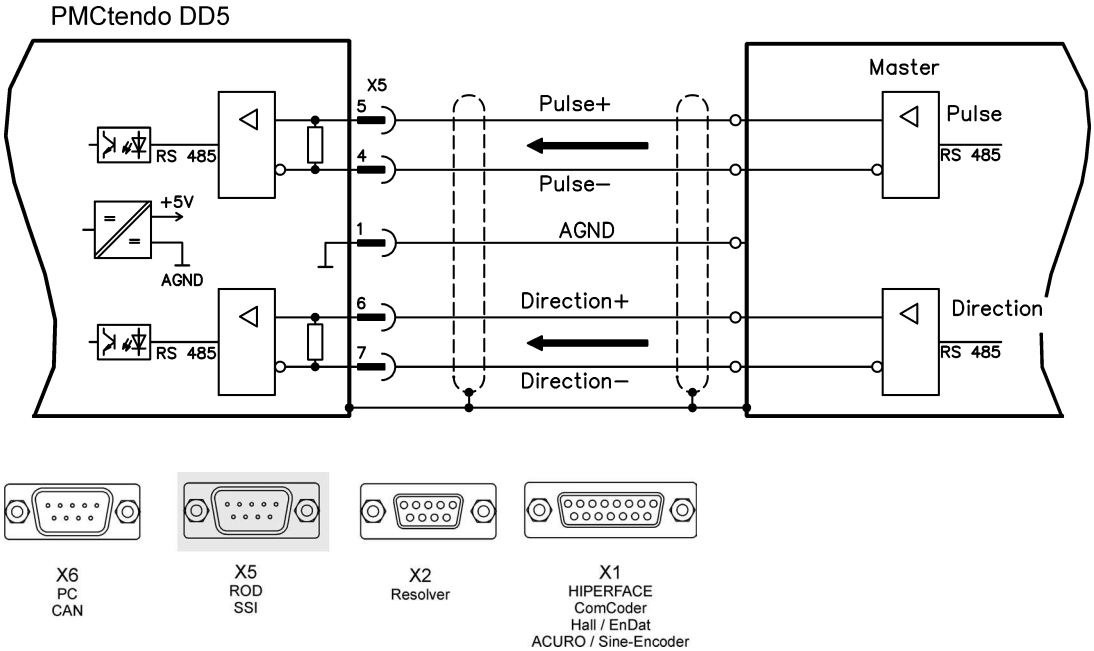

9.10.3 Connection to a stepper controller with 24V signal level (X3)

This interface can be used to connect the servo amplifier to a stepper-motor controller with a 24V signal level. It uses the digital inputs DIGITAL-IN 1 and 2 on connector X3.
Frequency limit: 100 kHz

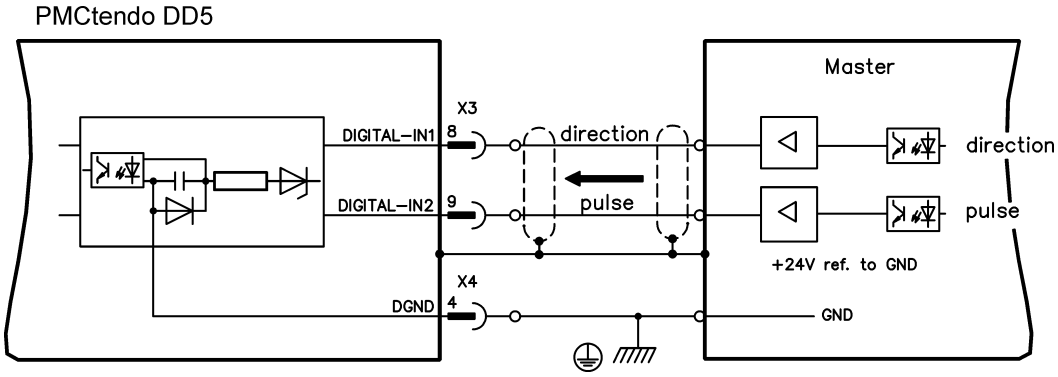

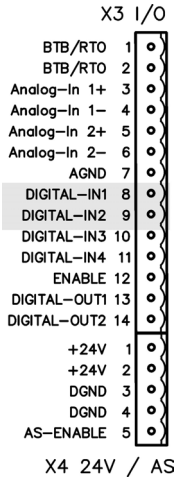

9.11 RS232 interface, PC connection (X6)

Operating, position control, and motion-block parameters can be set up by using the setup software **PDrive** on an ordinary commercial PC.

Connect the PC interface (X6) of the servo amplifier to a serial interface on the PC via a null-modem cable, **while the supply to the equipment is switched off**.

Do not use a null-modem power link cable!

This interface has the same electrical potential as the CANopen interface.
The interface is selected and set up in the setup software **PDrive**. Further notes on page 92.

With the optional –CAN adapter expansion card, the two interfaces for RS232 and CAN, which would otherwise use the same connector X6, are separated out onto three connectors (⇨ p. 107).

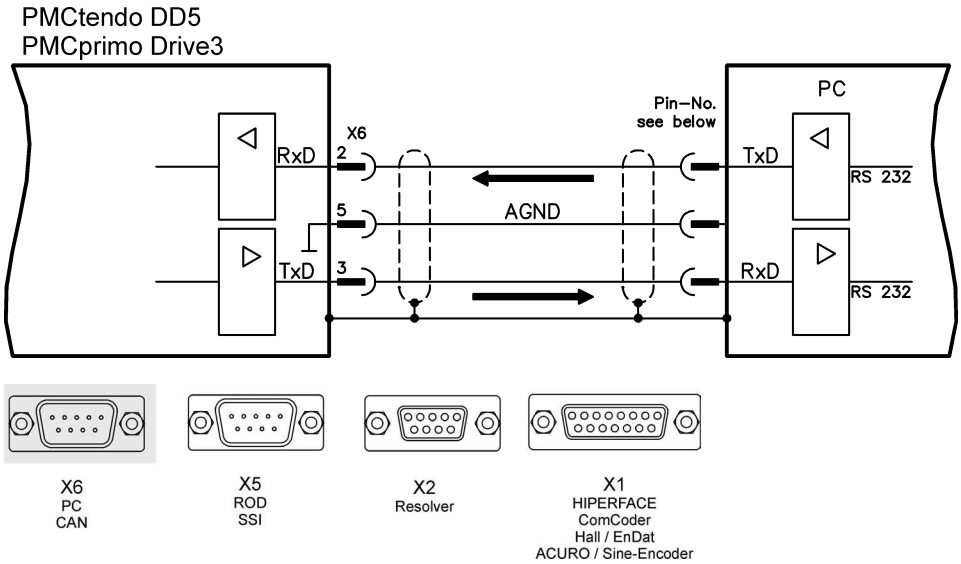

9.11.1 Interface cable between the PC and servo amplifier

(View : looking at the solder side of the SubD sockets on the cable)

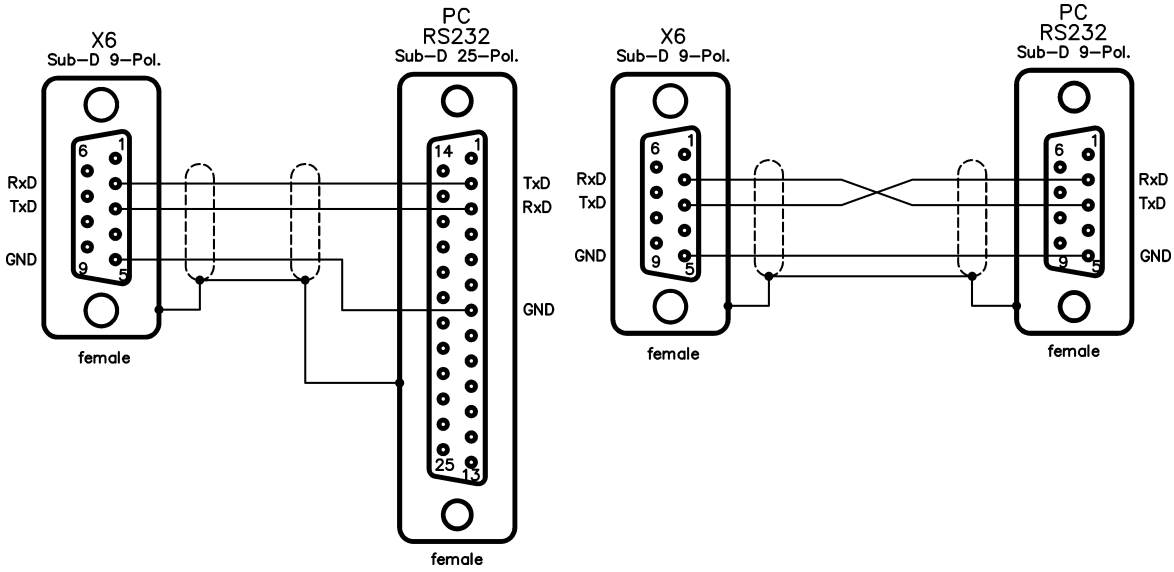

9.12 CANopen Interface (X6)

These interface can be used only at a PMCtendo DD5!

The interface for connection to the CAN-bus (default : 500 kBaud). The integrated profile is based on the CANopen DS301 communication profile and the DS402 drive profile.
The following functions are available in connection with the position controller:
Jogging with variable speed, homing run (zeroing to reference), start motion task, start direct task, digital setpoint provision, data transmission functions and many others.
Detailed information can be found in the CANopen manual. The interface is at the same electrical potential as the RS232 interface. The analog setpoint inputs can still be used.
With the optional –CAN adapter expansion card, the two interfaces for RS232 and CAN, which otherwise use the same connector X6, are separated out onto three connectors (with termination, ⇨ p. 107).

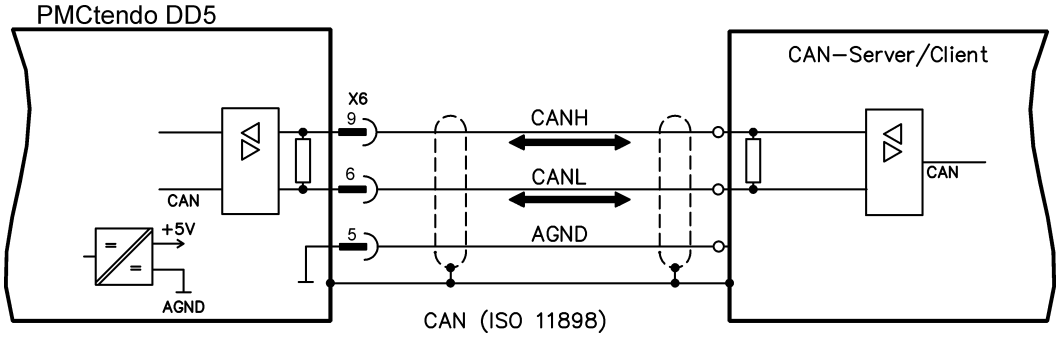

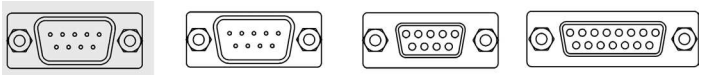

X6 PC CAN | X5 ROD SSI | X2 Resolver | X1 HIPERFACE ComCoder Hall / EnDat ACURO / Sine-Encoder

9.12.1 CAN-bus cable

To meet ISO 11898, a bus cable with a characteristic impedance of 120 Ω should be used. The maximum usable cable length for reliable communication decreases with increasing transmission speed. As a guide, you can use the following values which we have measured, but they are not to be taken as assured limits:

Cable data:

Characteristic impedance	100-120 Ω
Cable capacitance	max. 60 nF/km
Lead loop resistance	159,8 Ω/km

Cable length, depending on the transmission rate

Transmission rate / kBaud	max. cable length / m
1000	10
500	70
250	115

Lower cable capacitance (max. 30 nF/km) and lower lead resistance (loop resistance, 115 Ω/km) make it possible to achieve greater distances. (Characteristic impedance 150 ± 5Ω ➔ terminating resistor 150 ± 5Ω).

For EMC reasons, the SubD connector housing must fulfill the following requirements:

- metal or metalized housing
- provision for cable shielding connection on the housing, large-area connection

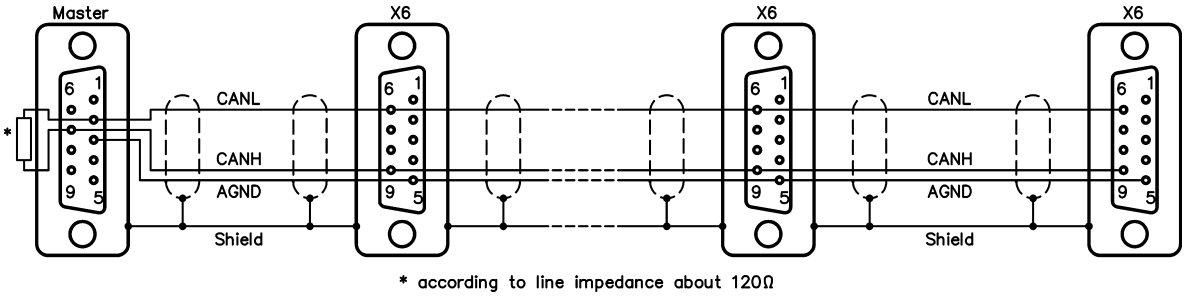

9.13 CAN bus Interface (X11/1,X11/2)

These interface is available only at a PMCprimo Drive3!

9.13.1 General

With the CAN bus interfaces CAN-1B (X11/1) and CAN-1A (X11/2) multiple PMCprimo motion control systems can be connected together. Additional safety signals provide fault detection.

Furthermore PMCtendo DD5 and PMCprimo Drive3 can be linked together.

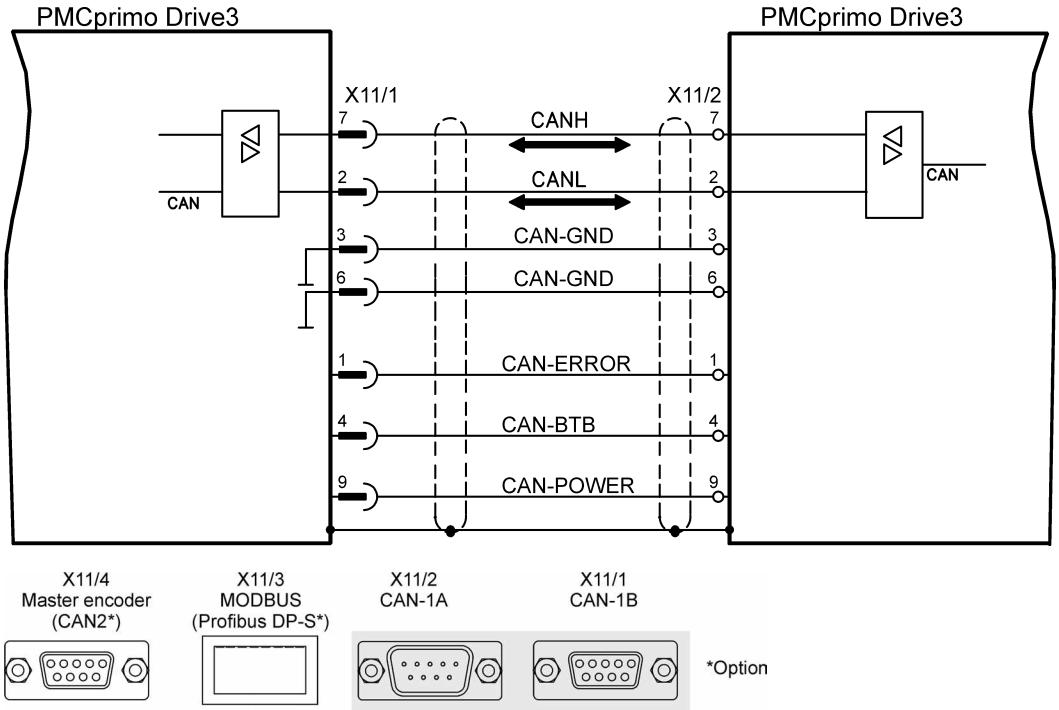

9.13.2 Connecting PMCprimo Drive3 systems

On each system CAN-1A (X11/1) and CAN-1B (X11/2) of the next system are joined together in the way as shown below.

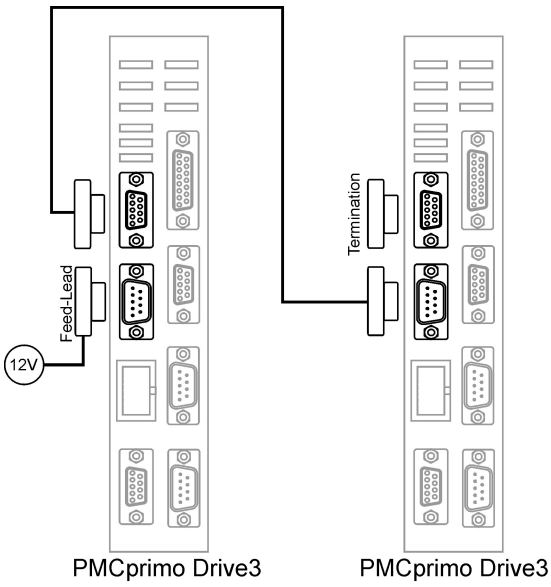

9.13.3 Speciality 1st node

- The 1st node is supplied with +12V at CAN-1A (X11/2, pin 9), referred to Pin 3 (CAN-GND). The power requirement is about 10mA each node.
- An additional resistor 10 kΩ (250 mW, metal 1%) between Pin 1 and Pin 4 is necessary.

9.13.4 Speciality last node

- The last node needs a jumper bridge (0 Ω) at CAN-1B (X11/1) between Pin 4 and Pin 9.

You can order pre-assembled cables from us:

CAN bus cable (1:1) 250 mm
CAN bus cable (1:1) 700 mm
CAN feedlead
CAN termination
Power supply 12 V

9.13.5 Fault detection

The following faults will be detected:

- Missing or defect +12V-CAN power supply
- Malfunction of a bus node
- Break of the CAN bus cable

9.13.6 Connecting external CANopen bus devices

It is possible to connect external CANopen devices with PMCprimo-motion control-systems.

With e.g. a CAN-I/O module you can increase the number of inputs and outputs in the system.

A CANopen encoder or CANopen panel can also be used.

Much more examples and hints can be found on the manual „PMCprimo CAN network“ on the enclosed CD-ROM.

9.14 CAN bus Interface (X11/4)

These interface is available only at a PMCprimo Drive3 with option -expansion card!

The connector X11/4 can be used with the option –expansion card (see p. 109) as a second CAN interface (CAN-2). The master encoder input X11/4 is diabled. This is done by changing the hardware settings (jumper). See page 109 for more information.

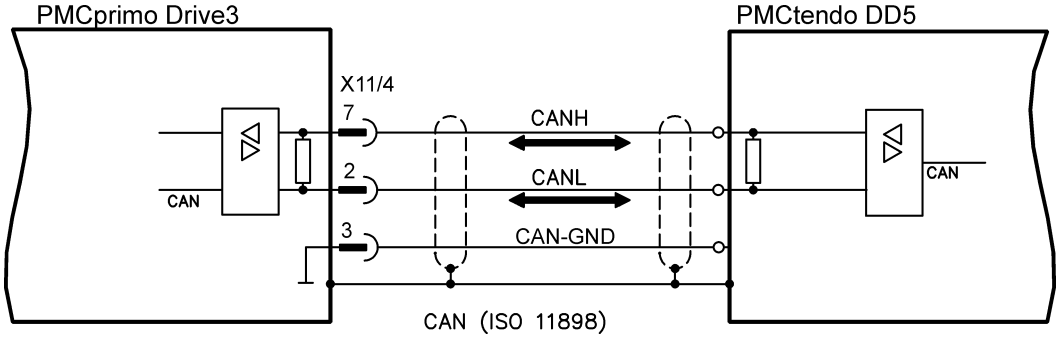

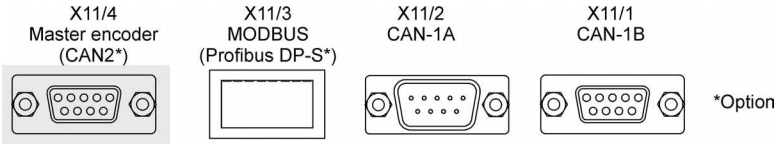

With the second CAN-2 interface up to 8 PMCtendo DD5 servo ampilfier can be linked with one PMCprimo Drive3.
Much more examples and notes can be found on the manual „PMCprimo CAN network“ on the enclosed CD-ROM.

Note:
The termination (120 Ω) for CAN-2 is activated with a DIP-switch (“ON”).

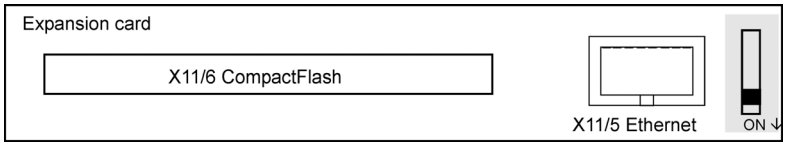

9.15 Master encoder interface (X11/4)

These interface is available only at a PMCprimo Drive3!

The PMCprimo Drive3 is designed for use with incremental or SSI encoders. The encoder type can easily be changed with the **FS** command.

With SSI encoders the number of data bits can be set with **NB**.

The direction of each encoder input can be changed with the command **CW**. Setting the direction bit reverses the direction of the encoder without wiring.

If a reference signal occurs, the actual encoder position is stored (see reference inputs page 60). This is useful for product referencing.
For further details see PMCprimo programming manual.

The master encoder is supplied via terminal X10 (pins 1 and 2). See page 45.

9.15.1 Incremental encoder (ROD)

- Reference ground is EGND (terminal X10 Pin 2)
- For encoders with differential line drivers – track A, B and Z (0-Index)
- Quadrature encoder x1, x2 and x4
- Maximum input frequency: 1 MHz
- Minimum track width Z-track: 200 ns
- Maximum voltage range (tracks) ref. to EGND: 5 V DC

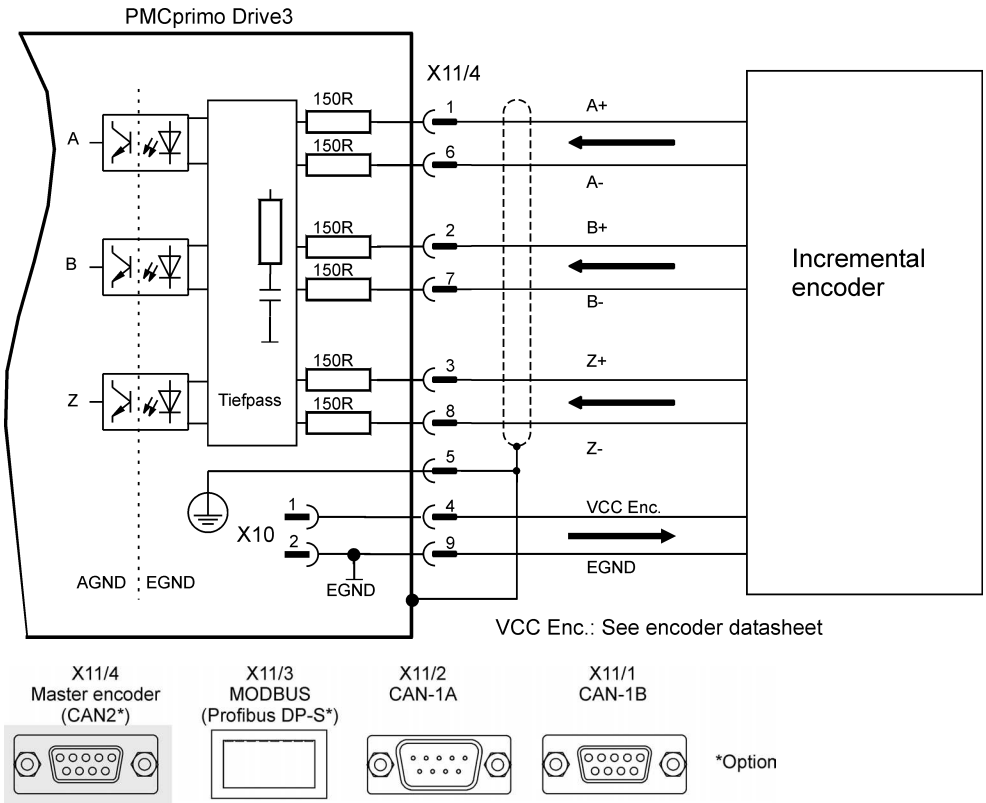

9.15.2 Absolute encoder (SSI)

- Reference ground is EGND (terminal X10 Pin 2)
- Number of bits: 13..32
- Format: Binary or Gray
- Clock frequency SSI-Clock: 100 kHz or 300 kHz (set with command FS)
- Maximum voltage range (tracks) ref. to EGND: 5 V DC

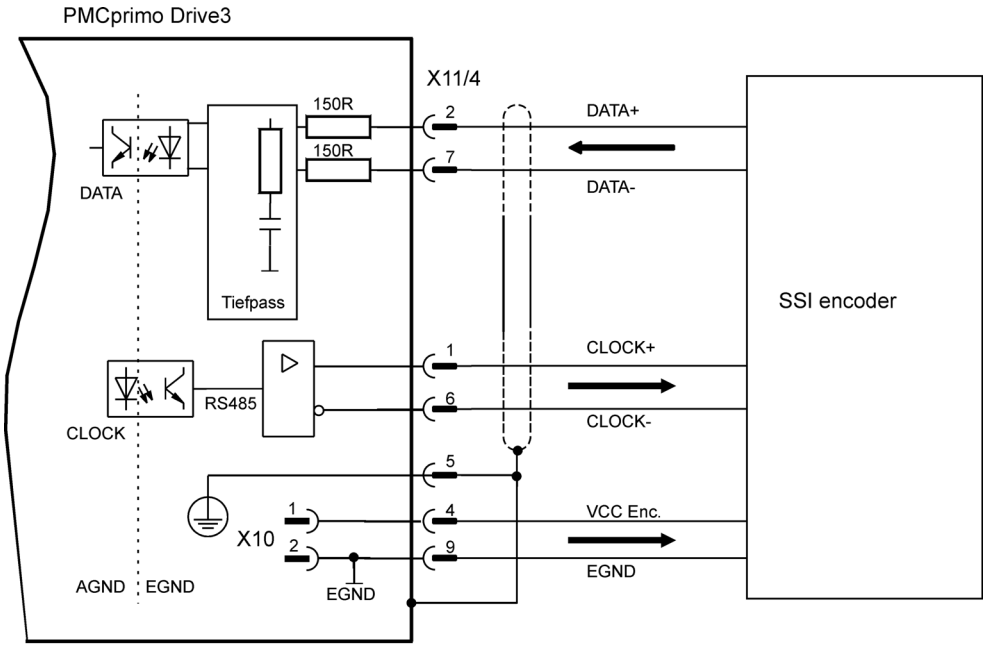

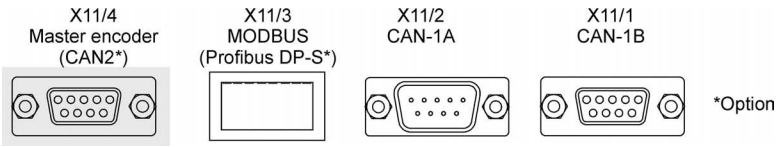

9.16 Panel interface - Modbus (X11/3)

These interface is available only at a PMCprimo Drive3!

9.16.1 General

At the PMCprimo Drive3 MODBUS panels can be connected, e.g. our PMI 315.

A special adapter cable is required which can be orderd from us.

In Standalone mode (see PMCprimo programming manual) at every control one panel can be connected.

In networked systems (CAN) the panel has to be connected to the host system. Only the host's MODBUS interface is active in this mode.

9.16.2 Interface

The communication uses a 5-core cable (RS422 full duplex). The communication parameters are:

- 9600 Baud, 8N1, no handshake

With the command **BM** the baud rate can be changed (s. PMCprimo programming manual)

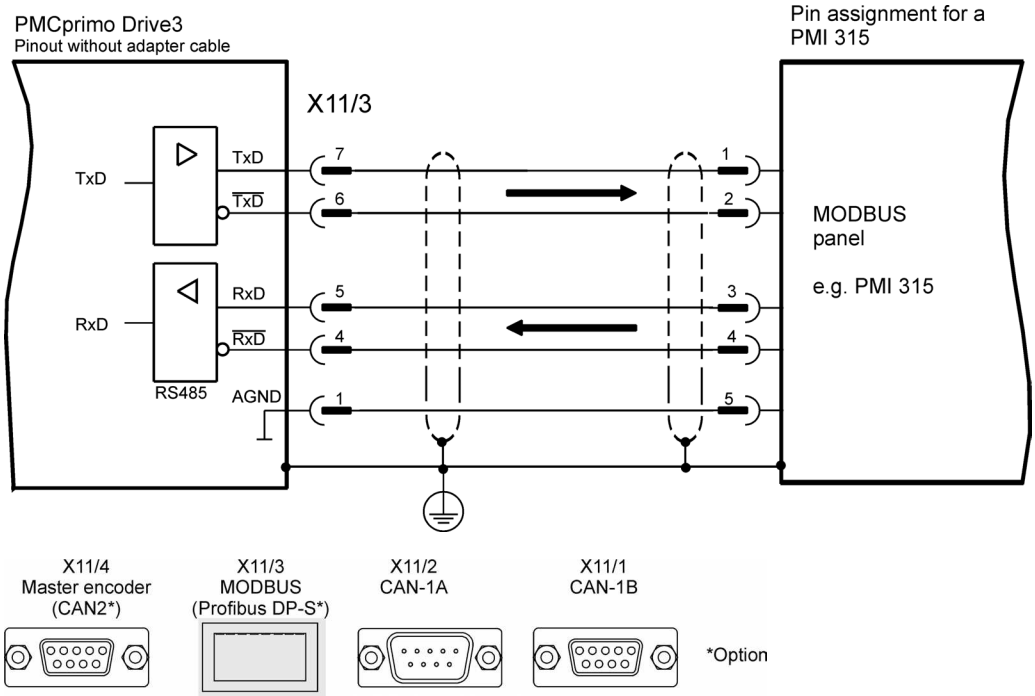

9.17 Profibus DP Slave interface (X11/3)

These interface is available only at a PMCprimo Drive3 with option –Profibus!

9.17.1 General

The PMCprimo Drive3 is alternatively delivered with a Profibus-DP slave interface. The MODBUS/RS422 interface will be disabled. This is done by changing the hardware settings (jumper) on the PMCprimo board (see page 110).

A special adapter cable is required which can be orderd from us.

All settings for the Profibus (slave adresse, adress range) are made with command **CD** (see PMCprimo programming manual).

The required GSD-file (HMS_1810.GSD) is located on the CD-ROM.

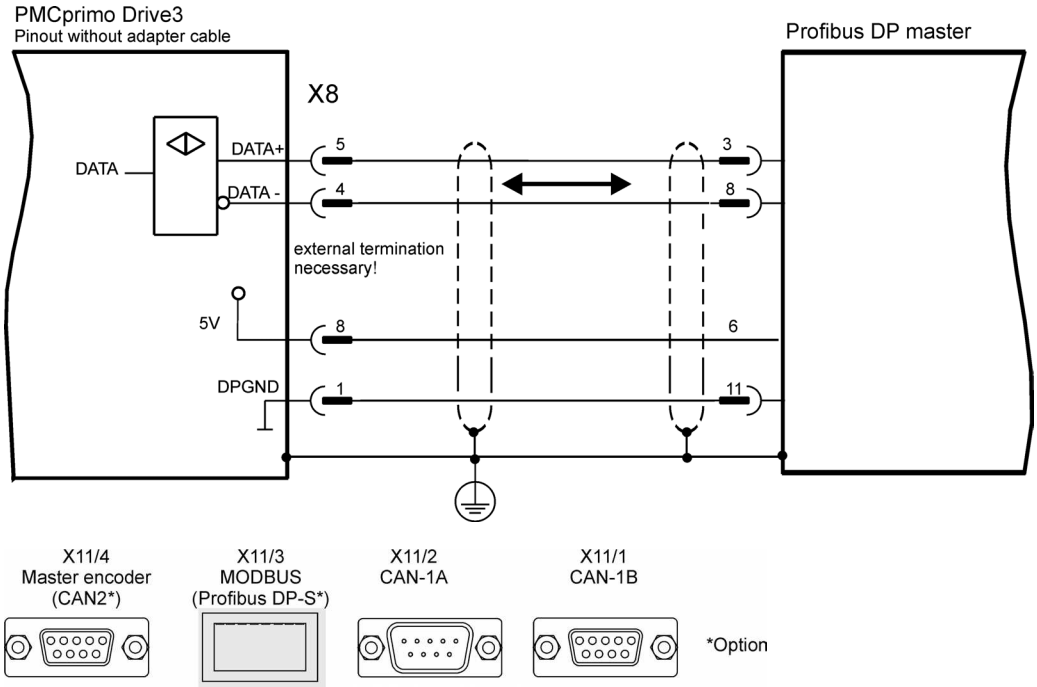

9.17.2 Using the Profibus interface with PMCprimo

With Profibus 16 bus variables can be used for data exchange. (See PMCprimo programming manual „bus variables“.)

- Adress range bus variables: $Bx to $Bx+16 (x=1,3,5...,offset adjustable with **CD**)
- Data width: 16 Bit (=2 Bytes resp. 1 Word) including sign.
- Data range: -32768 to 32767 (Hex: 0x8000 to 0x7FFF).

Defining bus variables to trigger variables, user programs may be executed on a data change of the variables.

9.17.3 Example using Profibus DP

After setting the slave address (command **CD 11; <address>)** the PMCprimo Drive3 has to be restarted. The following message appears when the module is recognized:

```
S T A R T

Ser.Nr.:3094, Version 2.007 Sep  1 2004, 10:37:49
Operate Mode: STANDALONE
Profibus-DP-IC found
Channel 0.1 found
Channel 0.2 found
Channel 0.3 found
Channel 0.4 found
Channel 0.5 found
Channel 0.6 found
Channel 0.7 found
Channel 0.8 found
Channel 0.9 found
Channel 0.10 found
```

In this example the bus variables $B1 up to $B16 are read and written (16 Words = 32 Bytes at all).

Subsequent, the Profibus-DP-Master has to be configured to IN/OUT: 32 Byte (16 word). The GSD file is named: HSM_1810.gsd

Example: Profibus-Master Simulator from Fa. Bihl und Wiedemann:

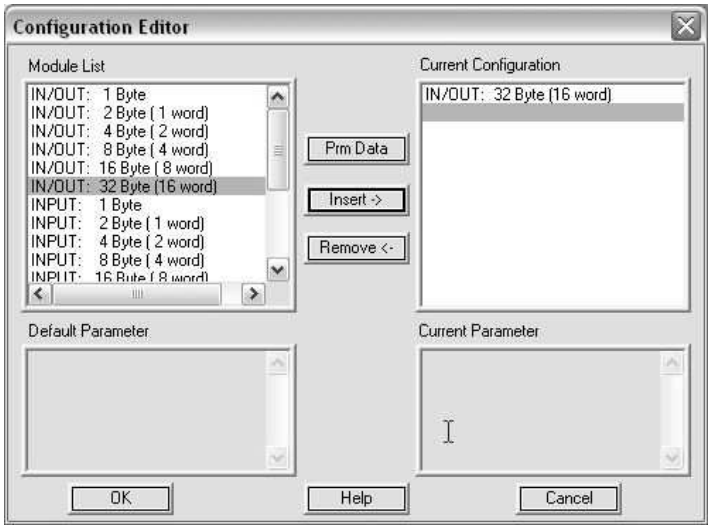

After starting the Profibus communication the bus variables can be set or read.

More information can be found in the PMCprimo programming manual.

9.18 Ethernet Interface (X11/5)

These interface is available only at a PMCprimo Drive3 with option –expansion card!

9.18.1 General

The Ethernet interface of the expansion board (RJ45, X11/5) is a fast alternative to the RS232 transfer.
With the terminal software **PTerm** data can transmitted with a speed of 100 Mbit/s.

The PMCprimo Drive3 can also be programmed and monitored locally in a Ethernet network, without direct presence of a programmer.

9.18.2 Interface

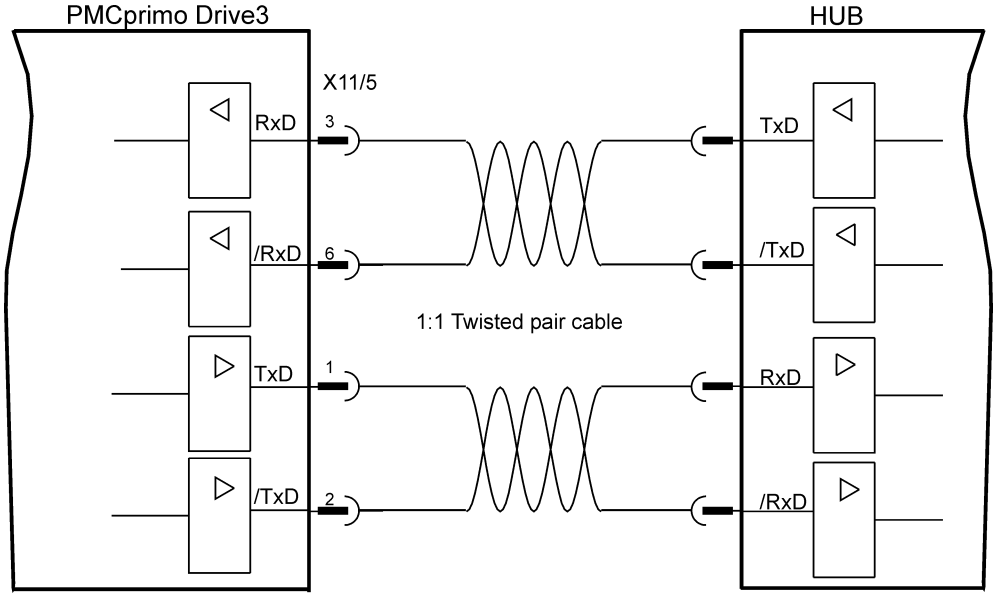

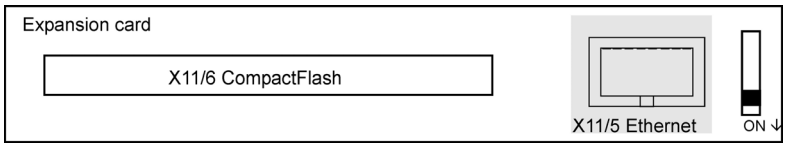

Pin	Description
1	TxD (send data)
2	/TxD (send data inverted)
3	RxD (receive data)
6	/RxD (receive data inverted)

Note!

For direct connection of the Ethernet interface with a PC you must use a crossover cable. The shown cable here is only for use with a hub.

9.18.3 Configuration IP address

To establish a connection to a PMCprimo Drive3, an IP address must configured for the control. This is done with the "**CD**" command (see PMCprimo programming manual).

9.19 Compact Flash Interface (X11/5)

These interface is available only at a PMCprimo Drive3 with option –expansion card!

9.19.1 General

With the Compact Flash Interface programs can easily exchanged between two servo amplifiers of the PMCprimo Drive3 series.

We recommend to use only compact flash cards from leading manufacturers. More information can be found in the „User manual for primoFTP and CompactFlash“.

9.19.2 Interface

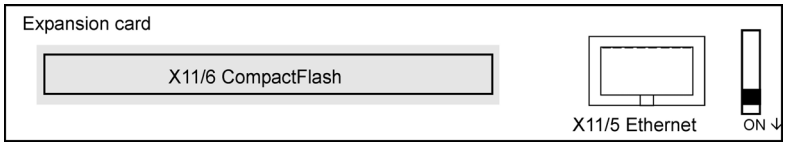

9.20 Personnel safe restart lock -AS-

A frequently required application task is the protection of personnel against the restarting of drives. This can be achieved by an electronic inhibit or with mechanical elements (positively driven relay contacts).
When positively driven relay contacts where used, either the net contactor in the mains supply circuit switched off or the motor was disconnected from the servo amplifier by an additional contactor.

The disadvantages of this method are:

- the DC bus link has to be charged up again at restart
- wear on the contacts of the contactors, caused by switching under load
- extensive wiring required, with additional switching components

The restart lock -AS- avoids these disadvantages.
The conceptual examination of the function "safe stop" (called restart lock AS in the following) was accomplished by the BG-Institute for Occupational Safety and Health and the classification in category 3 according to EN 954-1 was confirmed.

Advantages of the restart lock -AS- :

- the DC bus link remains charged up, since the mains supply line remains active
- only low voltages are switched, so there is no contact wear
- very little wiring is required
- the functionality and the personnel safety when using the circuit recommendations in this documentation have been approved by the Trade Liability Association

9.20.1 Technical data and pinning

Input voltage	20V..30V
Input current	40mA – 75mA (Ieff)
Peak current	220mA (Is)

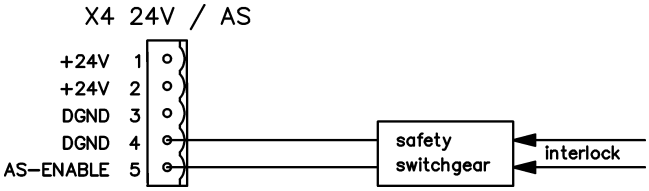

9.20.2 Environment

Since the servo amplifier meets enclosure IP20, you must select the environment ensuring a safe operation of the servo amplifier. The environment must meet enclosure IP54 at least.

9.20.3 Wiring

If the wiring leads outside the demanded enclosure (IP54), the cables must be laid durably (firmly), protected from outside damage (e.g. laying in a cable duct), in different sheathed cables or protected individually by grounding connection.
If wiring remains within the demanded enclosure, then it has to meet the requirements of the standard EN 60204-1, section 14-3.

9.20.4 Functional description

If the restart lock -AS- is not needed, then the input AS-ENABLE must be connected directly with +24VDC. The restart lock is then passed by and cannot not be used.
In case of use of the restart lock the input AS Enable must be connected to the exit of a security control or a safety relay, which meets at least to the requirements of the category 3 after EN 954-1 (see the connection diagram on page 85).

Possible states of the servo amplifier in connection with restart lock -AS-:

AS-ENABLE	ENABLE	Display	Motor has torque	Safety Kat. 3
0V	0V	-S-	no	yes
0V	+24V	F27	no	yes
+24V	0V	normal status e.g. 06	no	no
+24V	+24V	normal status e.g. E06	yes	no

If the restart lock is engaged during operation by separating input AS ENABLE from 24VDC, the motor runs down out of control and the servo amplifier displays the error F27. There is no possibility of braking the drive controlled. If a controlled braking before the use of the restart lock is necessary, the drive must be braked and the input AS-ENABLE has to be separated from +24VDC time-delayed.

The restart lock -AS- does not provide an electrical separation from the power output. If access to the motor power terminals is necessary, the servo amplifier must be disconnected from mains supply considering the discharging time of the intermediate circuit.

Since the restart lock is a single-channel system, erroneous engaging will not be recognized. When wiring the input AS-ENABLE within one enclosure it must be paid attention to the fact that the used cables and the enclosure meet the requirements of EN 60204-1.

If the wiring leads outside the demanded enclosure, the cables must be laid durably (firmly), and protected from outside damage.

9.20.4.1 *Signal diagram (sequence)*

The diagram shows how to use restart lock -AS- to ensure a safe stop of the drive and error free operation of the servo amplifier.

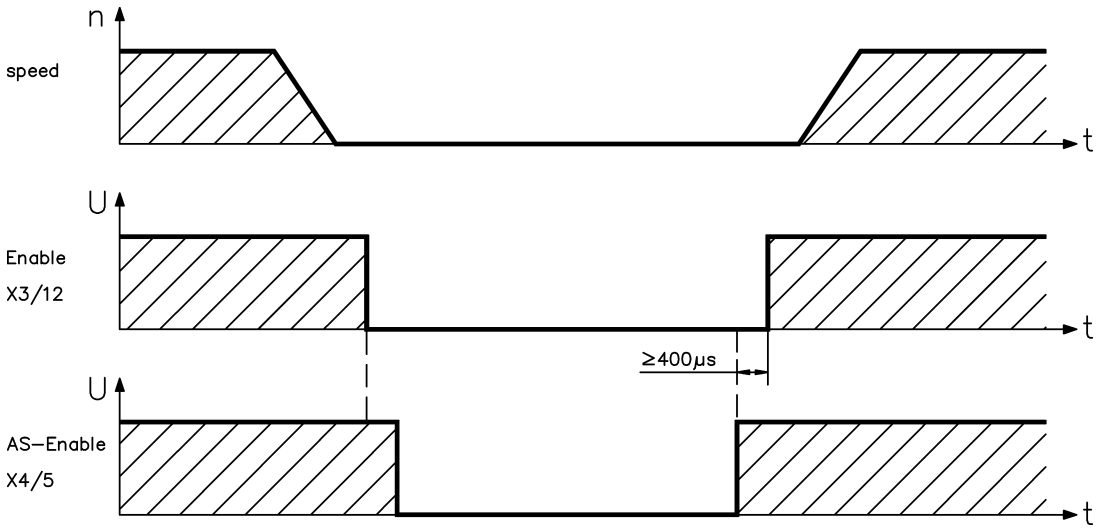

1. Brake the drive in a controlled manner (speed setpoint = 0V
2. When speed = 0 rpm, disable the servo amplifier (Enable = 0V)
3. Activate the restart lock -AS- (AS-Enable = 0V)

Suspended loads can set themselves to motion on motors without brake, because the motor loses all torque when restart lock -AS- is engaged (AS Enable open and/or 0V).

9.20.4.2 Control circuit

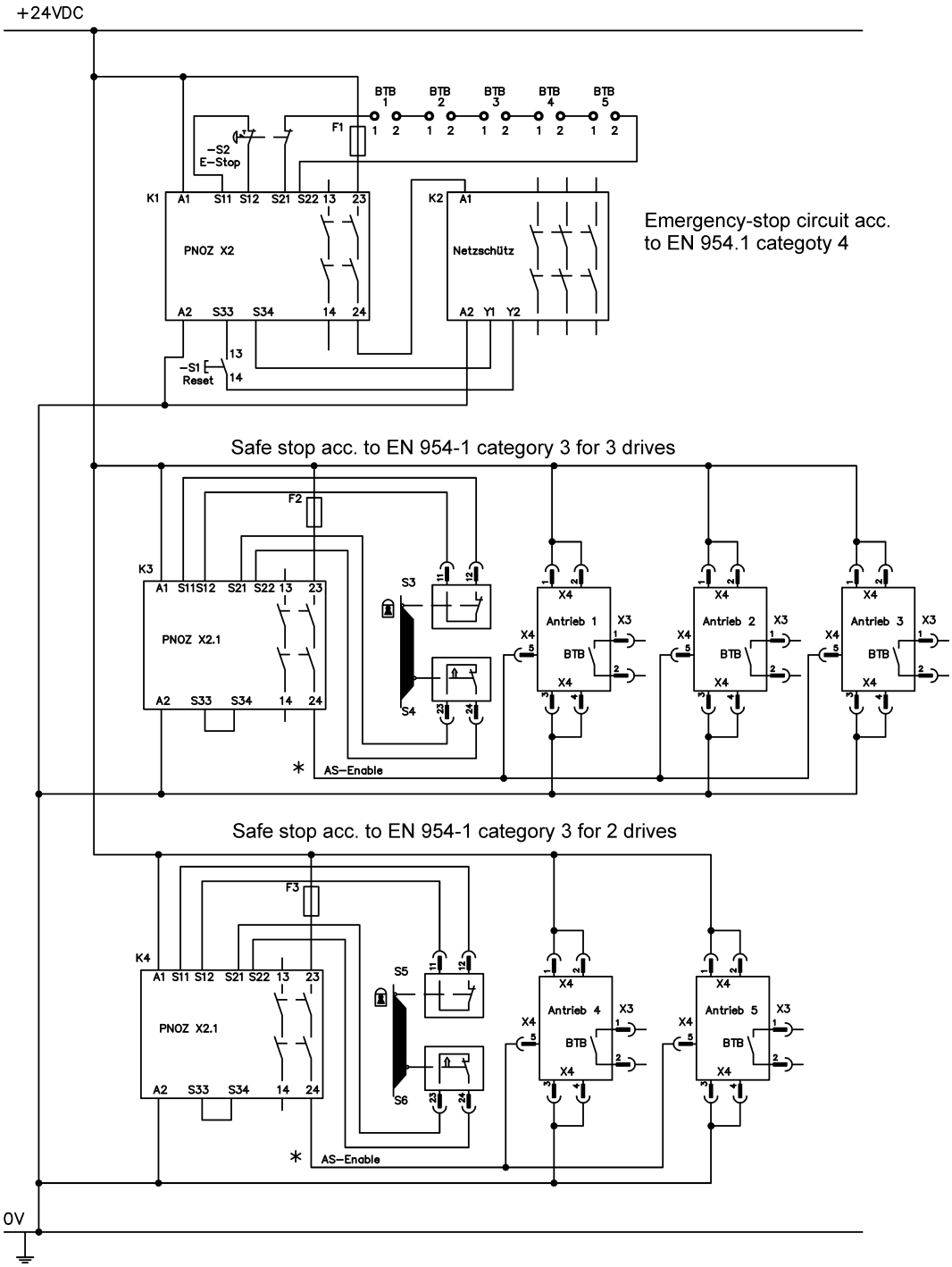

The example shows a circuit diagram with two separated work areas connected to one emergency stop circuit. For each work area individually "safe stop" of the drives is switched by a protective screen.
The safety switchgears used in the example fulfill at least the safety category 3 according to DIN 954-1.

Consider the wiring instructions on page 85.

9.20.4.3 *Functional test*

With initial starting and after each interference into the wiring of the drive or after exchange of one or several components of the drive the function of the restart lock must be tested.

First Method:

1. Stop drive, with setpoint 0V, keep servo amplifier enabled.
   Do not enter hazardous area!
2. Activate the restart lock -AS- e.g. by opening protective screen. (voltage at X4/5 0V).

Now the BTB/RTO contact opens, the net contactor releases and the servoamplifier displays error F27.

Second Method:

1. Stop all drives, with setpoint 0V, disable servo amplifier
2. Activate the restart lock -AS- e.g. by opening protective screen. (voltage at X4/5 0V).

Now the servo amplifier displays -S-.

9.20.4.4 *Mains supply circuit*

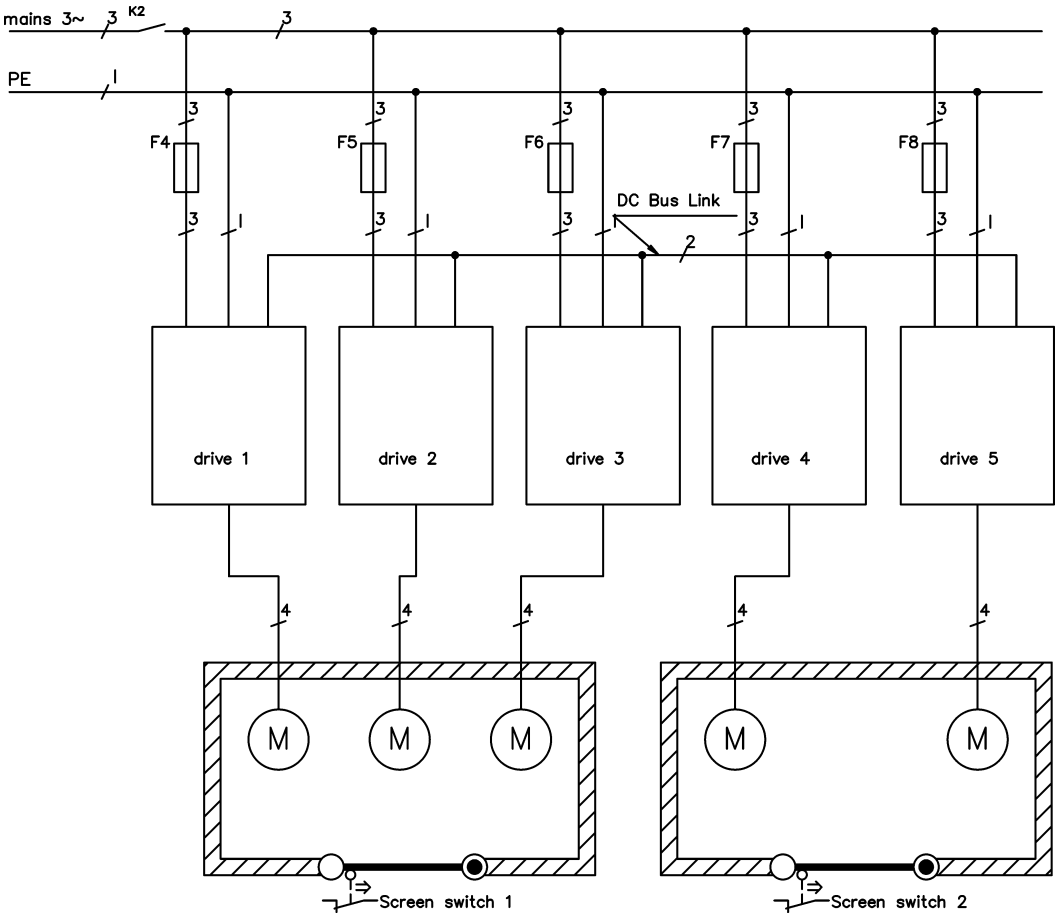

10 Setup

10.1 Important notes

Only professional personnel with extensive knowledge in the fields of electrical engineering and drive technology are allowed to setup the servo amplifier.

The procedure for setup is described as an example. Depending on the application, a different procedure may be appropriate or necessary. In multi-axis systems, set up each servo amplifier individually.

Before setting up, the manufacturer of the machine must generate a hazard analysis for the machine, and take appropriate measures to ensure that unforeseen movements cannot cause injury or damage to any person or property.

Check that all connection components that are live in operation are safely protected against bodily contact. The equipment produces potentially lethal voltages up to 900V. Never undo the electrical connections to the servo amplifier while it is live. Capacitors can still have dangerous residual charges up to 300 seconds after switching off the supply voltage.
The heat sink and front panel of the amplifier can reach temperatures up to 80°C in operation. Check the heat sink temperature. Wait until the heat sink has cooled down to 40°C before touching it.

If the servo amplifier has been stored for more than 1 year, it will be necessary to re-form the capacitors in the DC bus link circuit. To do this, disconnect all electrical connections and apply single-phase 230V AC to terminals L1 / L2 of the servo amplifier for about 30 minutes. This will re-form the capacitors.

Additional information on setting up the equipment:
The adaptation of parameters and the effects on the control loop behavior are described in the manual and the online help of the setup software PDrive.

The setting up of any expansion card that may be fitted is described in the corresponding manual on the CD-ROM.
We can provide further know-how through training courses (on request).

10.2 Guide to setup

The following instructions should help you to carry out the setup in a sensible order, without endangering people or machinery.

Check installation	See p. 29. **Disconnect the servo amplifier from the supply.**
Block the Enablesignals	Apply 0V to terminal X3/12 (Enable) and to terminal X4/5 (AS-Enable)
Switch on 24V auxiliary supply	Apply 24V DC to terminal X4/1 and teminal X10/3 (PMCprimo Drive3) ground terminal X4/3 and teminal X10/2 (PMCprimo Drive3) After the initialization procedure (about 0.5 sec.) the status will be shown in the LED display (⇨ p. 98)
Switch on PC, start setup software PDrive	Select the interface to which the servo amplifier is connected. The parameters which are stored in the SRAM of the servo amplifier are then transferred to the PC.
Check the displayed parameters, and correct if necessary	**It is especially important to check the following parameters. If these critical values are not set properly, the system may be damaged or destroyed.**
Supply voltage:	Set to the actual electrical supply voltage
Rated motor voltage:	at least as high as the DC bus link voltage of the amplifier
Motor pole-no.:	must match the motor (see motor manual)
Feedback:	must match the feedback device in the motor
I_{RMS}:	maximum is the motor standstill current I_0 (on nameplate)
I_{PEAK}:	maximum is 4 x motor standstill current I_0
Limit speed:	maximum is the rated motor speed (on nameplate)
Regen power:	maximum is the permitted regen resistor dissipation
Station address:	unique address (see manual for setup software **PDrive**)
Check safety devices	**Make sure that any unintended movement of the drive cannot cause and danger to personnel or machinery.**
Switch on supply power	Use the ON/OFF button of the contactor controls
Apply 0V command	Apply 0V to terminals X3/3-4 or X3/5-6 respectively (PMCtendo DD5 only)
Enable	Apply 24V DC (500 ms after switching on the supply power) to terminal X3/12, motor stands with standstill torque M_0
Setpoint	Apply a small analog setpoint (about 0.5V is recommended) to terminals X3/3-4 or X3/5-6 respectively (PMCtendo DD5 only) **If the motor oscillates, the parameter Kp on the menu page "Speed controller" must be reduced – motor is in danger**
Optimization	Optimize speed, current and position controllers (see Online Help)
Set up the expansion card	See setup instructions in the corresponding manual on the CD-ROM

10.3 Setup software PDrive

This chapter describes the installation of the setup software PDrive for the PMCtendo DD5 and PMCprimo Drive3.

The parameter settings are described detailed in the software manual for **PDrive**.

The programming is described in the PMCprimo programming manual.

Both manuals can be found on the CD-ROM PMCprimo Motion Control Tools..

10.3.1 Use as directed

The setup software **PDRIVE** is intended to be used for setting up and storing the operational parameters for the PMCtendo DD5 und PMCprimo.

Only professional personnel who have the relevant expertise described on page 11 are permitted to carry out online parameter setting for a drive which is running.
Sets of data which are stored on data media are not safe against unintended alteration by other persons. After loading a set of data you must therefore check all parameters thoroughly before enabling the PMCtendo DD5 and PMCprimo Drive3.

10.3.2 Software description

The parameters of the PMCtendo DD5 and PMCprimo Drive3 must be adapted to the requirements of the installation. This parametrization is done with the setup software **PDrive** which provides the communication between PC and PMCtendo DD5 or PMCprimo Drive3.

With very little effort you can alter parameters and instantly observe the effect on the drive, since there is a continuous (online) connection to the drive.
With the tool **PSCOPE** you can easily watch the drive current, the speed and the position error. Sets of data can be stored on data media (archived) and loaded again. Sets of data which are stored on data media can be printed.
We supply you with motor-specific default sets of data for all the reasonable combinations of PMCtendo DD5 or PMCprimo Drive3 and motor. In most applications you will be able to use these default values to get your drive running without any problems.

10.3.3 Hardware requirements

The PC interface (X6, RS232) of the servo amplifier is connected to the serial interface of the PC by a null-modem cable (⇒ p.72).

The interface in the servo amplifier is electrically isolated by an optocoupler.

10.3.4 Minimum requirements for the PC:

Prozessor	:	Pentium III or higher
Operating system	:	WINDOWS 2000/XP
Grafics adapter	:	1024 x 768, color
Drives	:	Hard disk (100 MB free)
		CDROM drive
Main memory	:	at least 256MB
Interface	:	one free serial interface (COM1 or COM2)

10.3.5 Installation under WINDOWS 2000 / XP

On the CD-ROM an installation program called **SETUP.EXE** can be found, which makes it easy to install the setup software on your PC.
Start **SETUP.EXE** and follow the instructions.

10.3.6 Working with PDrive

The parameter settings and using the tools are described detailed in the software manual for **PDRIVE**.

10.4 Parametrization of the PMCtendo DD5 and PMCprimo Drive3

To facilitate the parametrization der PMCtendo DD5 and PMCprimo Drive3, a motor database is supplied with the drive.
You can find the parameters for a lot of possible combinations between the PMCtendo DD5 or PMCprimo Drive3 and the motors of the PMCtendo AC1, AC2 and AC3 series.

An exact description of all parameters and the possibilities for optimizing the control loop characteristics can be found in the software manual PDrive.

10.4.1 Multi-axis systems

10.4.1.1 Station address for CAN-bus

During setup it makes sense to use the keypad on the front panel to preset the station addresses for the individual amplifiers and the Baud rate for communication (⇨ p. 94).

10.4.1.2 Baud rate for CAN-bus

After changing the station address and baud rate you must turn the 24V auxiliary supply for the servo amplifier off and on again.

Coding of the Baud rate in the LED display:

Coding	Baud rate in kBit/s	Coding	Baud rate in kBit/s
0	10	5	250
1	20	6 (*)	333
2	50	7	500
3	100	8 (*)	666
4	125	9	800
		10	1000

* not PMCprimo Drive3

10.4.2 Keypad operation PMCtendo DD5

This section illustrates the two possible operating menus and the use of the keys on the front panel. Normally, the only presents the standard menu for your use. If you want to operate the amplifier via the detailed menu, you must keep the right key pressed while switching on the 24V supply.

10.4.2.1 Keypad operation

The two keys can be used to perform the following functions:

Key symbol	functions
▲	**press once :** move up one menu item, increase number by one **press twice in rapid succession** : increase number by ten
▼	**press once :** move down one menu item, decrease number by one **press twice in rapid succession :** decrease number by ten
▲ ▼	**hold right key pressed, and then press left key as well :** to enter a number, “Return” function

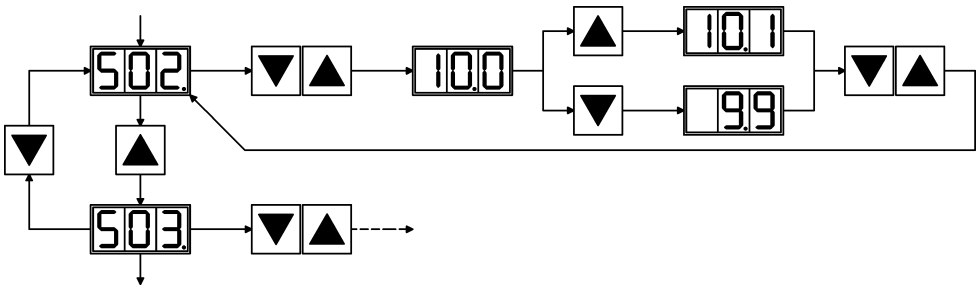

10.4.2.2 Status display

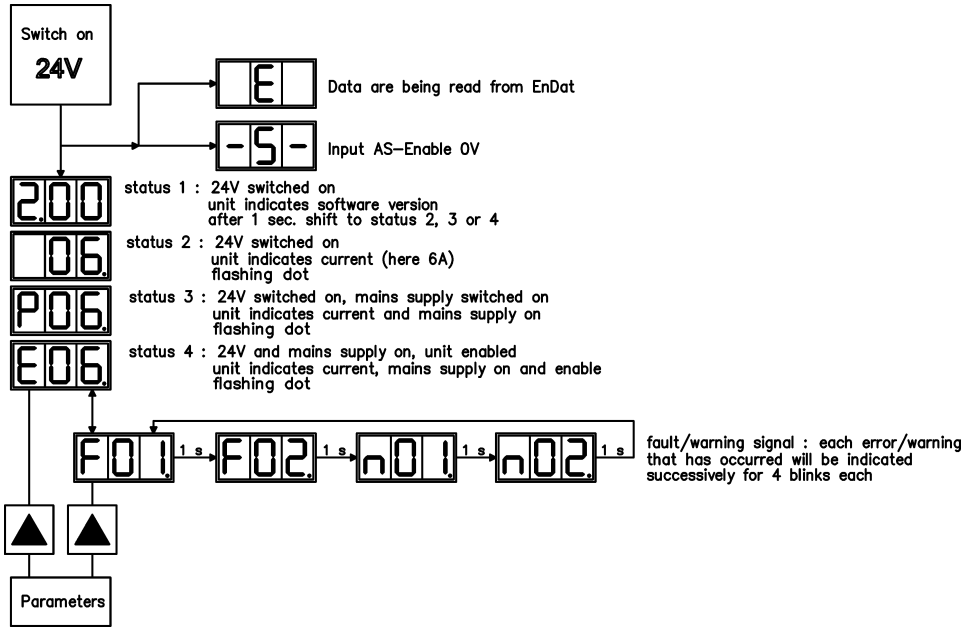

10.4.2.3 Standard menu

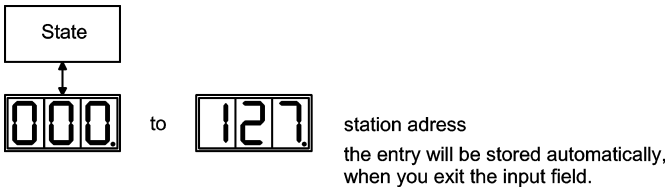

10.4.2.4 Advanced menu

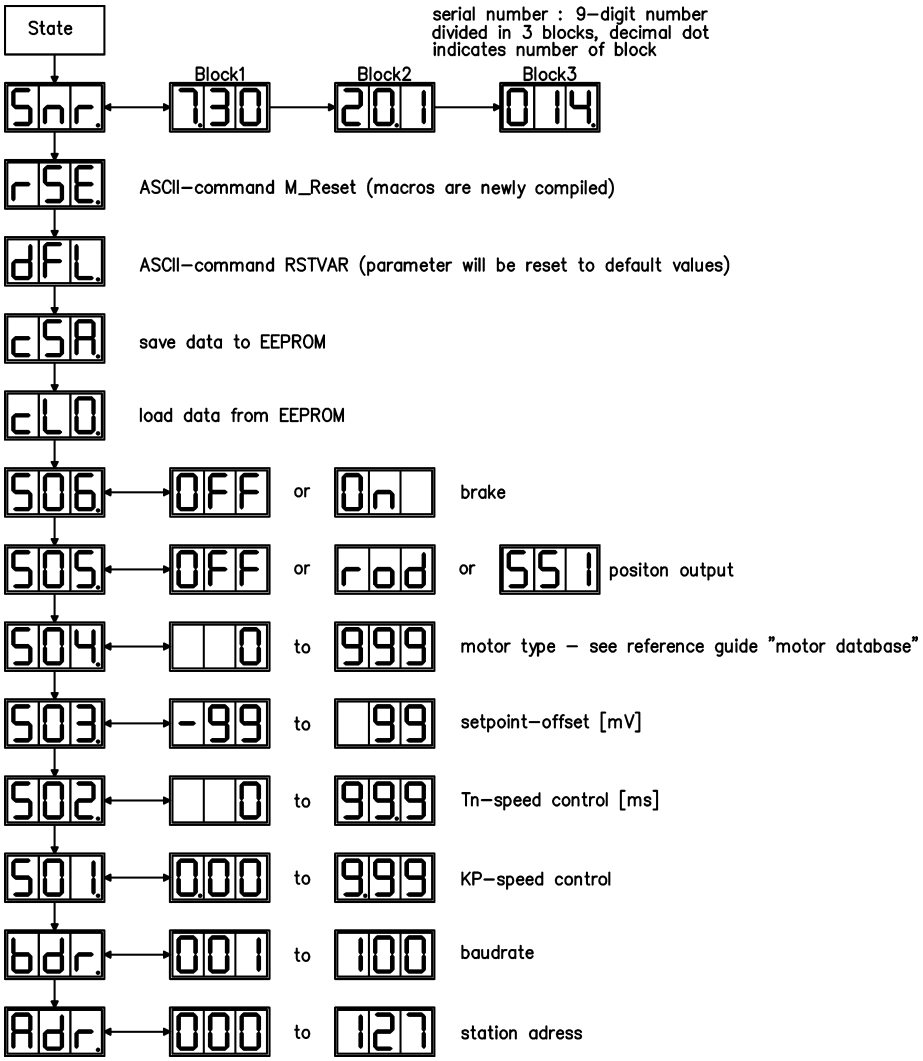

10.4.3 Keypad operation PMCprimo Drive3

The key operation for PMCprimo Drive3 is like the key operation for PMCtendo DD5. This means that the two keys are used in the same way and also the menus are named similarly.

10.4.4 Basic key operation

For accessing the menu press the right key while switching on the 24 V power supply. Then this parameters can be set with the menu:

- The **operating mode**
  (0: Standalone, 2 Node and 3 Host+Node)
  When changing the operate mode between 2 and 3 then the application program in the flash memory is not erased. The memory is even not erased if mode 0 is selected by a mistake.
- The **CAN node number** depending from the operating mode:
  Standalone: from 1 to 127
  Node: from 1 to 60
  Host+Node: Not available because node number is fixed
- The **CAN Baud rate**.
  Except for code 6 (333kBit/s) and code 8 (666kBit/s) all baud rates for PMCtendo DD5 (see table page 93) are supported.
- The proportional Gain Kp (GV command) for the velocity loop of the drive
- Save parameters.

After changing the parameter and returning from the function the changed parameter have to be saved with the menu for saving. Then the system has to be switched off and on to enable the changed settings.

10.4.5 LED Display

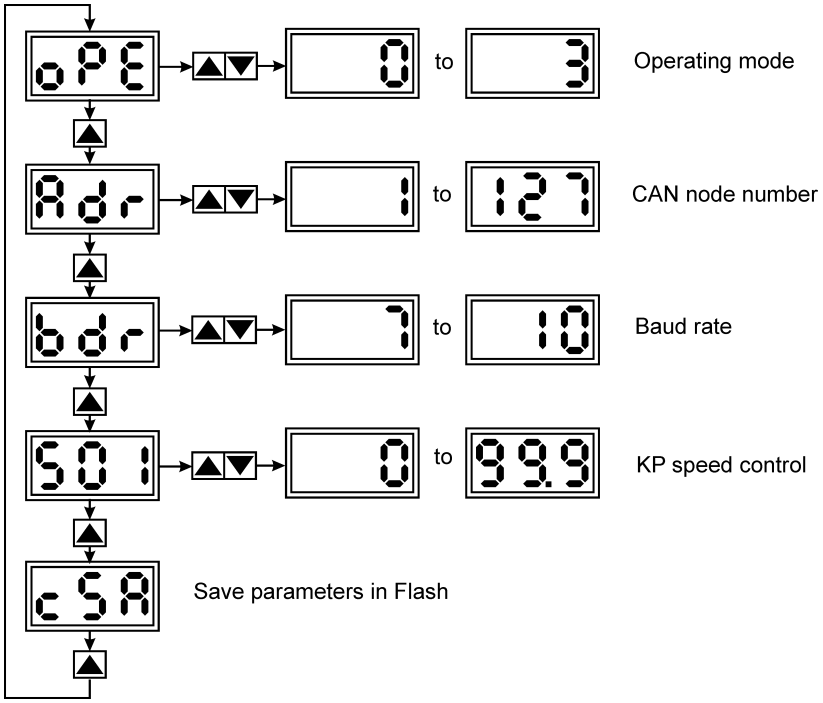

10.5 Programming of the PMCprimo Drive3

All programming of the PMCprimo Drive3 is done with the terminal program **PTERM** or, as an option, with the soft PLC development system **CoDeSys®** from 3S.

A succesful optimation of the PMCprimo Drive3 position controller is only possible after an well done optimation of the current and speed controllers with PDRIVE.

For further details see the the PMCprimo programming manual.

10.6 Error messages PMCtendo DD5

Any errors that occur are shown in coded form by an error number in the LED display on the front panel. All error messages result in the BTB/RTO contact being opened, and the output stage of the amplifier being switched off (motor loses all torque), and the motor-holding brake is activated. Detailled description see "ASCII command reference".

Number	Designation	Explanation
E/S/A/P	status Messages	status messages, no error, see p. 94
. . .	status Message	amplifier is updating the startup configuration
-	status Message	status message, no error, programming mode
F01*	heat sink temperature	heat sink temperature too highlimit is set by manufacturer to 80°
F02*	overvoltage	overvoltage in DC bus linklimit depends on the electrical supply voltage
F03*	following error	message from the position controller
F04	feedback	cable break, short-circuit, short to ground
F05*	undervoltage	undervoltage in DC bus linklimit is set by manufacturer to 100V
F06	motor temperature	motor temperature too high or temp. sensor defect
F07	reserved	reserved
F08*	overspeed	motor runs away, speed is too high
F09	EEPROM	checksum error
F10	signal failure X5	signal failure X5 (cable break or similar)
F11	brake	cable break, short-circuit, short to ground
F12	motor phase	motor phase missing (cable break or similar)
F13*	ambient temperature	ambient temperature too high
F14	output stage	fault in the power output stage
F15	I^2t max.	I^2t maximum value exceeded
F16*	mains BTB/RTO	2 or 3 phases missing in the mains supply feed
F17	A/D converter	error in the analog-digital conversion, normally caused by extreme electromagnetic interference
F18	regen	regen circuit faulty or incorrect setting
F19*	DC bus link	DC bus link breakdown
F20	slot error	slot error, depends on the type of expansion card (see ASCII command reference)
F21	handling error	Handling error on the expansion card
F22	reserved	reserved
F23	CAN-bus off	severe CAN bus communication error
F24	warning	warning is displayed as fault
F25	commutation error	commutation error
F26	limit switch	hardware limit switch error on homing move
F27	AS	operational error with -AS- , input for AS-Enable and ENABLE have been set at the same time
F28	fieldbus error	fieldbus error (see ASCII command reference)
F29	fieldbus error	fieldbus communication is disturbed (see ASCII command reference)
F30	emergency timeout	Timeout emergency stop
F31	reserve	reserve
F32	system error	system software not responding correctly

* = these error messages can be cleared without a reset, by using the ASCII command CLRFAULT. If only one of these errors is present and the RESET button or the I/O RESET function is used, only the CLRFAULT command will be executed.

You can find further information on handling errors from page 113 and in the "ASCII command reference" (part of the setup software's online help system)

10.7 Warning messages PMCtendo DD5

Faults which occur, but which do not cause a switch-off of the amplifier output stage (BTB/RTO contact remains closed), are indicated in the LED display on the front panel by a coded warning number. Detailled description see "ASCII command reference”

Number	Designation	Explanation
E/S/A/P	status Messages	status messages, no error, see p. 94
. . .	status Message	amplifier is updating the startup configuration
-	status Message	status message, no error, programming mode
n01	I^2t	I^2t threshold exceeded
n02	regen power	reached preset regen power limit
n03*	S_fault	exceeded preset following error limit
n04*	response monitoring	response monitoring (fieldbus) has been activated
n05	supply phase	mains supply phase missing
n06*	SW limit switch 1	passed software limit switch 1
n07*	SW limit switch 2	passed software limit switch 2
n08	motion task error	a faulty motion task was started
n09	no reference point	no reference point (Home) set at start of motion task
n10*	PSTOP	PSTOP limit-switch activated
n11*	NSTOP	NSTOP limit-switch activated
n12	motor default values loaded	only for ENDAT or HIPERFACE® :discrepancy between motor number saved in the encoder and the amplifier, motor default values loaded
n13*	expansion card	expansion card not operating correctly
n14	SinCos feedback	SinCos commutation (wake & shake) not completed, will be canceled when amplifier is enabled and wake & shake carried out
n15	table error	fault according to speed/current table INXMODE 35
n16	summarized warning	summarized warning for n17 to n31
n17	fieldbus-sync	sync is not logged in
n18	multiturn overflow	max. number of motor turns exceeded
n19-n31	reserve	reserve
n32	firmware beta version	firmware is an unreleased beta version
A	reset	RESET is present on input DIGITAL INx

* = these warning messages result in a controlled shut-down of the drive (braking by emergency stop ramp)

You can find further information on handling errors from page 113 and in the "ASCII command reference" (part of the setup software's online help system)

10.8 Error messages PMCprimo Drive3

Errors which occur are shown in coded form by an error number in the LED display on the front panel (ticker).
All error messages are also displayed on the connected terminal program **PTerm.**
(x =axis number)

Number	Description
xF01	Position error
xF03	High position limit
xF04	Low position limit
xF05	Reference timeout
xF06	Reference out of limits
xF07	Reference overrun
XF13	Motor timeout
xF20	Heat sink temperature too high (limit is set by manufacturer to 80°C)
xF21	Overvoltage in DC-link
xF22	Feedback error (cable break, short circuit, short to ground)
xF23	Undervoltage in DC-link
xF24	Motor temperature too high (limit is set by manufacturer to145°C)
xF25	Aux. voltage not OK
xF26	Overspeed (motor running away, speed is too high)
xF27	EEprom checksum error
xF28	Flash-Eprom checksum error
xF29	Brake: cable break, short circuit, short to ground
xF30	Motor phase missing (cable break or similar)
xF31	Internal temperature too high
xF32	Fault in the output stage
xF33	I^2t max. value exceeded
xF34	2 or 3 phases missing in the supply feed
xF35	Error in the analog-digital conversion
xF36	Regen circuit faulty or incorrect setting
xF37	A supply phase is missing (can be switched off for 2-phase operation)
xF38	System software not responding correctly
xF39	ENABLE not active
xF40	Commutation error

The error messages **xF20** - **xF39** result in the BTB/RTO contact being opened, and the output stage of the PMCprimo Drive3 being switched off (motor looses all torque). If a motor-holding brake is installed, it will be activated.

Example of an error message (ticker):

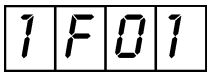

Error code 1F01: Channel 1: Position error

With the command “**CD17,1**” (as of firmware version 2.004) the 7 segment display can be configured, to just show “run” when there is no error. With “**CD17,0**” the previous display will be activated.

10.9 Status messages PMCprimo Drive3

The LED-Display shows the actual state of 3 channels at the same time for one second, then it switches to the next three channels (if enabled with the **CD** command).

Display	Description	Command
P	Position control mode	PC
0	Motor off mode	MO
1	Velocity control mode	VC
2	Moving to new position	MA, MR
4	Executing a position mapping	XM
5	Stopping under normal deceleration	ST
6	Initializing to reference position	IN, IB
7	Torque control mode	AM, XM
9	Waiting	WA, WB, WI, etc.
A	Alignment move	XM
C	Software clutch	XM, ST

Example of a status message (enabled with **CD** command):

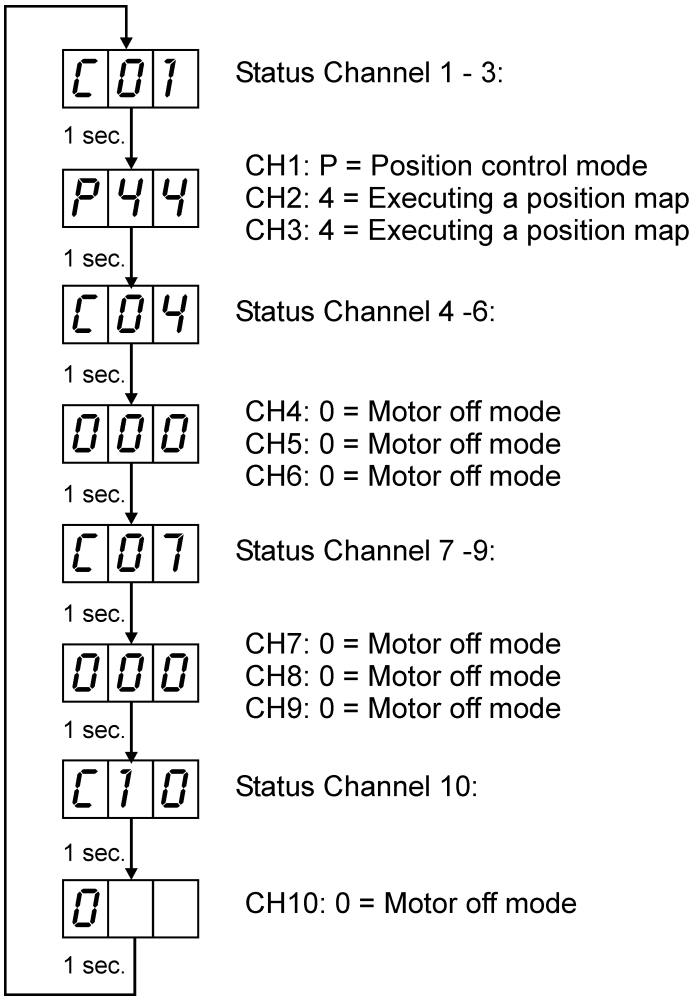

11 Expansions and Accessories

11.1 Expansion Cards

11.1.1 Guide to installation of expansion cards

- Use a suitable screwdriver to lever off the cover of the option slot.

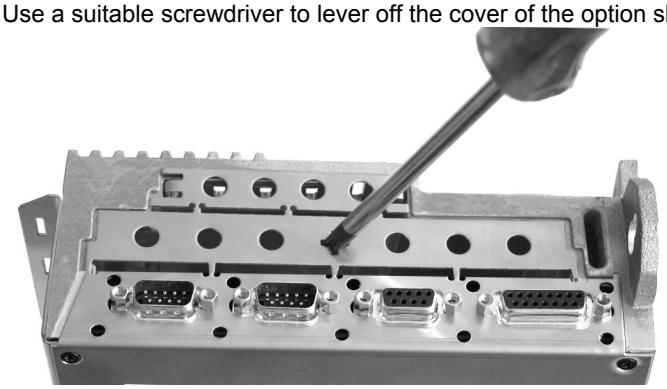

- Take care that no small items (such as screws) fall into the open option slot.
- Lever off the small metall sheet and push it back to the small slot. Dispose the big metall sheet.

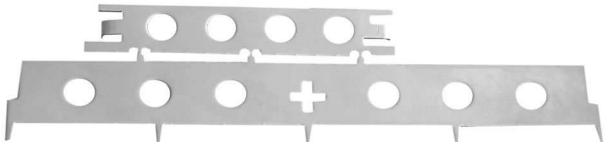

- Push the expansion card carefully into the provided guide rails of the main slot, without twisting it.

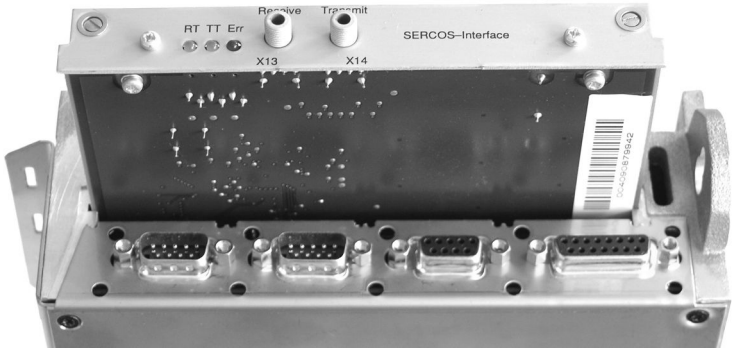

- Press the expansion card firmly into the slot, until the front cover touches the fixing lugs. This ensures that the connectors make good contact.
- Screw the screws on the front cover into the threads in the fixing lugs.

11.1.2 Expansion card -I/O-14/08-

This section describes the additional features that the expansion card -I/O-14/08- provides for the . If you ordered the expansion card together with the servo amplifier, then it will be delivered already inserted into the expansion slot of the servo amplifier and screwed in place.
The -I/O-14/08- provides you with 14 additional digital inputs and 8 digital outputs. The functions of the inputs and outputs are adjustable with the setup software.
The I/Os are used to initiate the motion tasks that are stored in the servo amplifier and to evaluate signals from the integrated position control in the higher-level control system.
The functions of the inputs and signal outputs correspond to the functions that can be assigned to the digital I/Os on connector X3. All inputs and outputs are electrically isolated from the servo amplifier by optocouplers.

11.1.2.1 Front view

11.1.2.2 Technical data

Control inputs	24V / 7mA , PLC-compatible, IEC 1131
Signal output	24V / max. 500mA , PLC-compatible, IEC 1131
Supply inputs, to IEC 1131	24V (18 … 36V) / 100mA plus total current of the outputs (depends on the input wiring of the controls) **The 24V DC voltage must be supplied by an electrically isolated power supply (e.g. with isolating transformer).**
Fusing (external)	4 AT
Connectors	MiniCombicon, 12-pin, coded on PIN1 and 12
Cables	Data – up to 50m long : 22 x 0.5 mm², unshielded, Supply– 2 x 1mm², check voltage drop
Waiting time between 2 motion tasks	depends on the response time of the control system
Addressing time (minimum)	4ms
Starting delay (maximum)	2ms
Response time of digital outputs	max. 10ms

11.1.2.3 LEDs

Two LEDs are mounted next to the terminals on the expansion card. The green LED signals that the 24V auxiliary supply is available for the expansion card. The red LED signals faults in the outputs from the expansion card (overload of switching components, short-circuit).

11.1.2.4 Entering a motion block number

Motion block number (decimal)	Motion block number (binary)							
	A7	A6	A5	A4	A3	A2	A1	A0
174	1	0	1	0	1	1	1	0

11.1.2.5 Connector assignments

The functions are adjustable with the setup software **PDrive**. In the table below the default values are described.

Connector X11A			
Pin	**Dir**	**Default Function**	**Description**
1	In	A0	Motion block number, LSB
2	In	A1	Motion block number, 21
3	In	A2	Motion block number, 22
4	In	A3	Motion block number, 23
5	In	A4	Motion block number, 24
6	In	A5	Motion block number, 25
7	In	A6	Motion block number, 26
8	In	A7	Motion block number, MSB
9	In	Reference	Polls the home switch. If a digital input on the base unit is used as a home input, then the input on the expansion card will not be evaluated.
10	In	F_error_clear	Clears the warning of a following error (n03) or the response monitoring (n04)
11	In	Start_MT_Next	The following task, that is defined in the motion task by “Start with I/O” is started. The target position of the present motion task must be reached before the following task can be started. The next motion block can also be started by an appropriately configured digital input on the base unit.
12	In	Start_Jog v= x	Starts the "Jog Mode" with a defined speed. “x” is the speed saved in the servo amplifier for the function "Jog Mode". A rising edge starts the motion, a falling edge cancels the motion.

Connector X11B			
1	In	MT_Restart	Continues the motion task that was previously interrupted.
2	In	Start_MT I/O	Starts the motion task that is addressed by A0-A7 (connector X11A/1...8).
3	Out	InPos	When the target position for a motion task has been reached (the InPosition window), this is signaled by the output of a HIGH signal. **A cable break will not be detected.**
4	Out	Next-InPos	The start of each motion task in an automatically executed sequence of motion tasks is signaled by an inversion of the output signal. The output produces a LOW signal at the start of the first motion task of the sequence. The form of the message can be varied by using ASCII commands.
		PosReg 0	Can only be adjusted by ASCII commands/setup software.
5	Out	F_error	A LOW signal indicates that the position has gone outside the acceptable following error window.
6	Out	PosReg1	default: SW limit 1, indicated by a HIGH signal
7	Out	PosReg2	default: SW limit 2, indicated by a HIGH signal
8	Out	PosReg3	Can only be adjusted by ASCII commands/setup software.
9	Out	PosReg4	Can only be adjusted by ASCII commands/setup software.
10	Out	PosReg5	Can only be adjusted by ASCII commands/setup software.
11	-	24V DC	Supply voltage for output signals.
12	-	I/O-GND	Digital GND for the control system.

11.1.2.6 Connection diagram

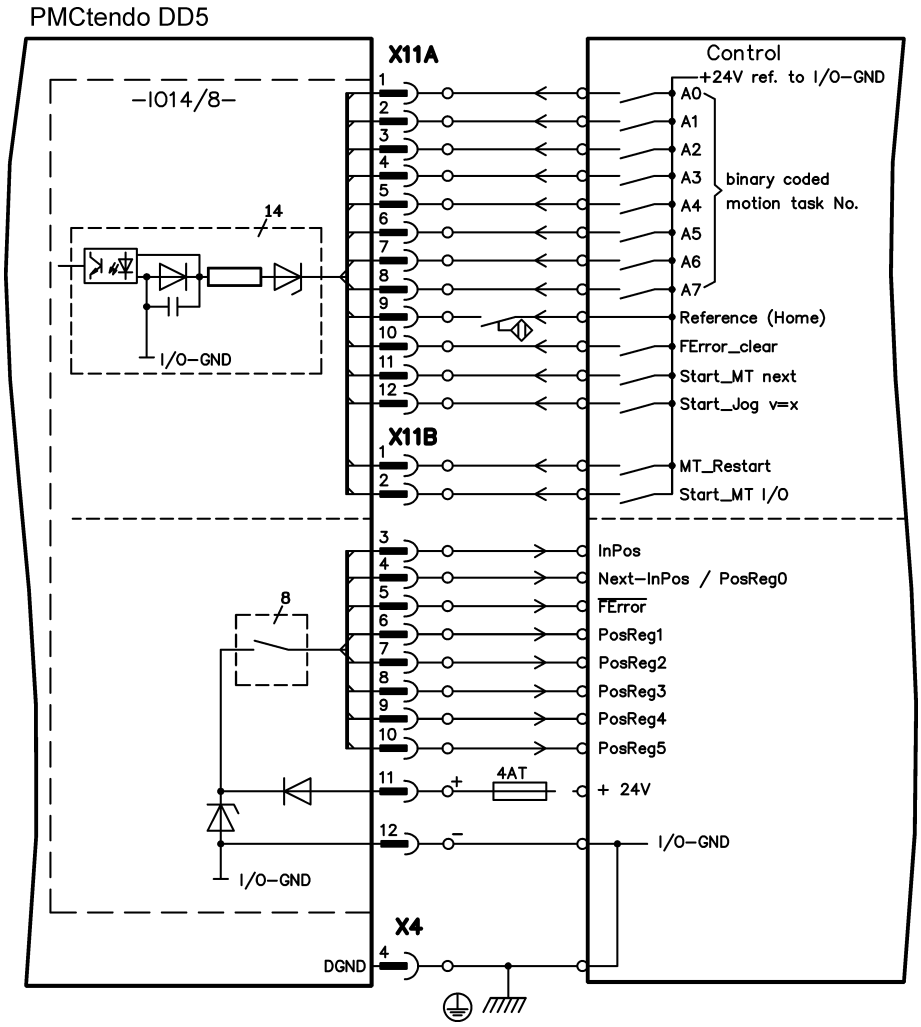

11.1.3 Expansion card -PROFIBUS-

This section describes the PROFIBUS expansion card for the .
Information on the range of functions and the software protocol can be found in our manual "Communication Profile PROFIBUS DP".
The PROFIBUS expansion card has two 9-pin SubD sockets wired in parallel.
The supply voltage for the expansion card is provided by the servo amplifier.

11.1.3.1 Front view

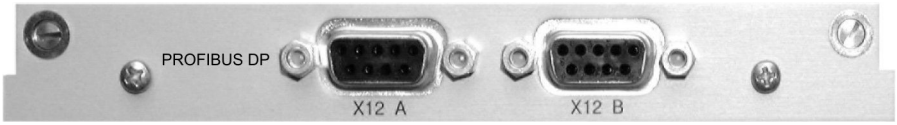

11.1.3.2 Connection technology

Cable selection, cable routing, shielding, bus connector, bus termination and transmission times are all described in the "Installation Guidelines for PROFIBUS-DP/FMS" from PNO, the PROFIBUS User Organization.

11.1.3.3 Connection diagram

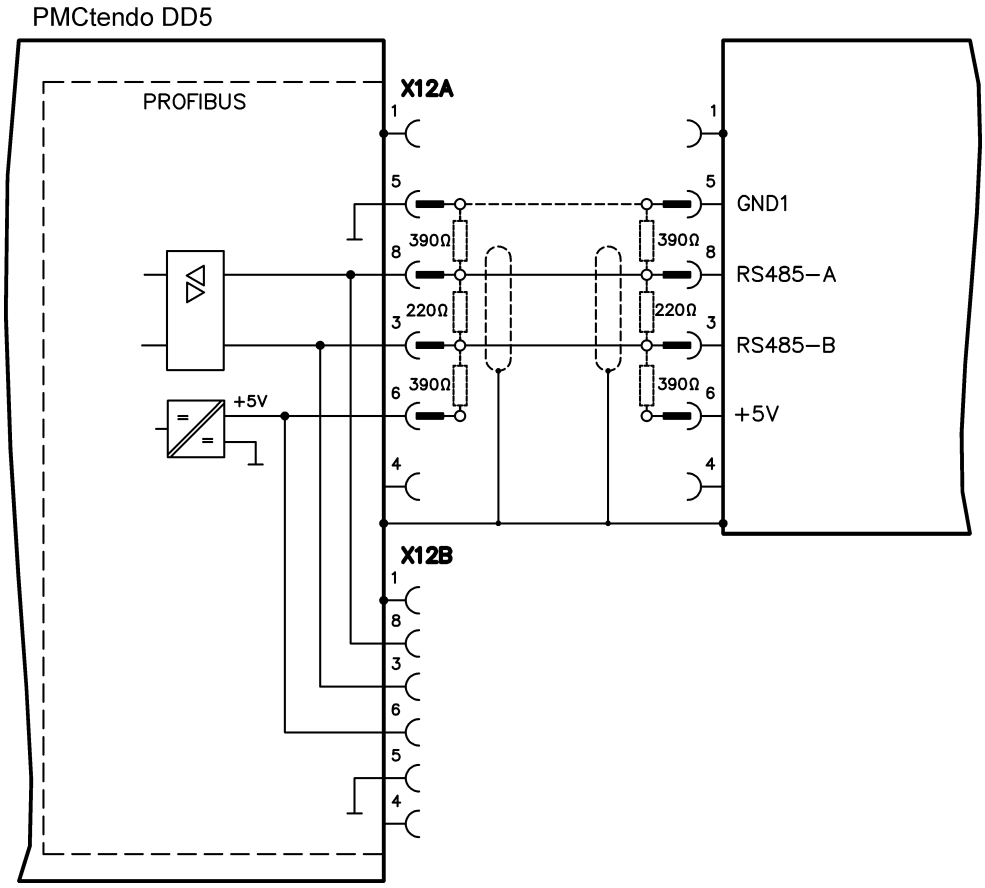

11.1.4 Expansion module –CAN adapter

Connector X6 of the PMCtendo-DD5 is assigned to the signals for the RS232 interface and the CAN interface. It is therefore not the standard pin assignment for these interfaces, and a special cable is required to be able to use both interfaces simultaneously.
The –CAN adapter- expansion module provides the interfaces on separate Sub-D connectors. The two CAN connectors are wired in parallel. A termination resistor (120 Ω) for the CAN bus can be switched into circuit if the PMCtendo-DD5 is at the end of the bus.

When using the PMCtendo DD5 in combination with several PMCprimo devices in the CAN main net, the switch **FEED** is needed. Much more details about connection systems via CAN are included in the manual „PMCprimo CAN network“.

11.1.4.1 Installation

The modul must be placed onto the option slot after levering off the cover of the option slot and replacing the small cover (see p. 102):

- Screw the distance pieces into the fixing lugs of the option slot
- Place the expansion module onto the option slot.
- Screw the screws into the threads of the distance pieces
- Plug the Sub-D9 socket into connector X6 on the PMCtendo DD5

11.1.4.2 Connection technology

Standard shielded cables can be used for the RS232 and CAN interfaces.

If the servo amplifier is the last device on the CAN bus, then the switch for the bus termination must be set to ON.
Otherwise, the switch must be set to OFF (condition as delivered).

11.1.4.3 Connector assignments

RS232		CAN1=CAN2	
X6A Pin	**Signal**	**X6B=X6C Pin**	**Signal**
1		1	CAN-ERROR (*)
2	RxD	2	CAN-Low
3	TxD	3	CAN-GND
4		4	CAN-BTB(*)
5	GND	5	
6		6	CAN-GND
7		7	CAN-High
8		8	
9		9	CAN-POWER(*)

(*) only when connecting with multi PMCprimo devices in CAN main net

11.1.4.4 Connection diagram

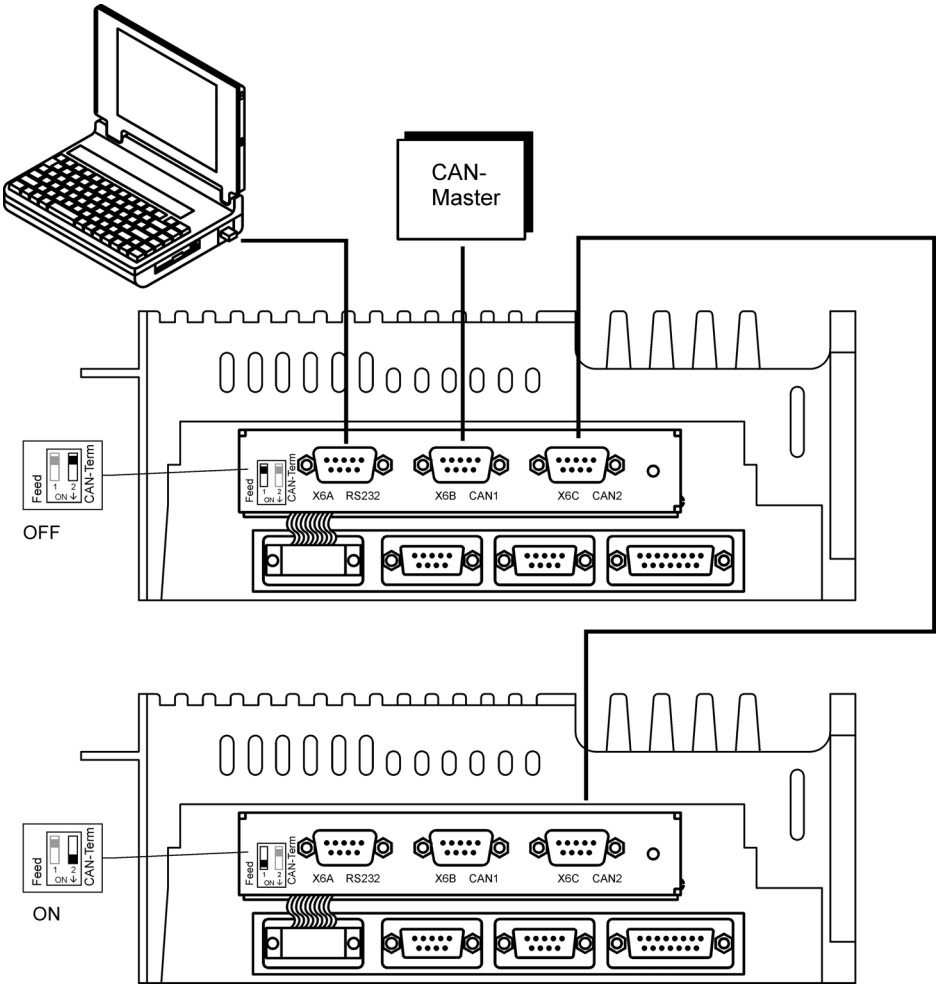

11.1.5 PMCprimo board and PMCprimo expansion card

The PMCprimo board upgrades the PMCtendo DD5 to a motion control device with a lot of interfaces and nearly unlimited functionality.
The installation of the PMCprimo card is described in the “Installation and Operating Instructions for PMCprimo board”.

This chapter gives information about:

- Changing connector X11/4 Master encoder ⇔ CAN2 interface
- Changing connector X11/3 MODBUS/RS422 ⇔ Profibus DP slave interface
- Replacing the buffer battery on the PMCprimo expansion card

ESD danger!

ESD : Electrostatic Discharge
ESDS : Electrostatic Sensitive Devices

Motion control units contain electrostatic sensitive devices which will be damaged by electrostatic discharge. Therefore servicing shall only be performed in ESD safe areas and by ESD protected personnel

11.1.5.1 Change X11/4 Master encoder ⇔ CAN2 interface

Four jumpers have to be set:

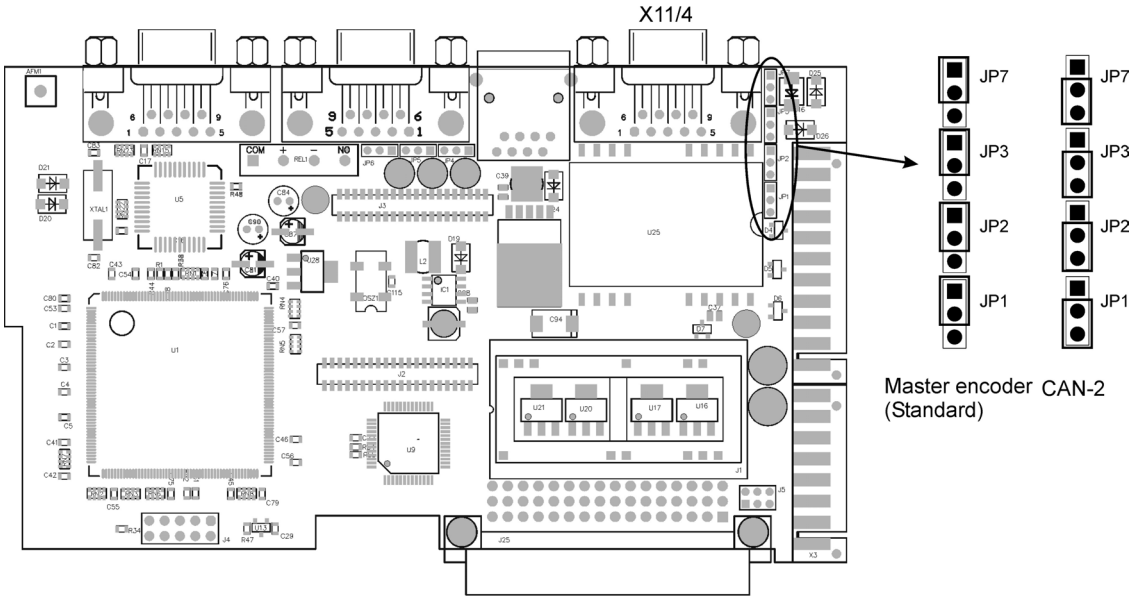

PMCprimo board

11.1.5.2 Change X11/3 MODBUS ⇔ Profibus DP

After installing the Profibus DP module three jumpers have to be set:

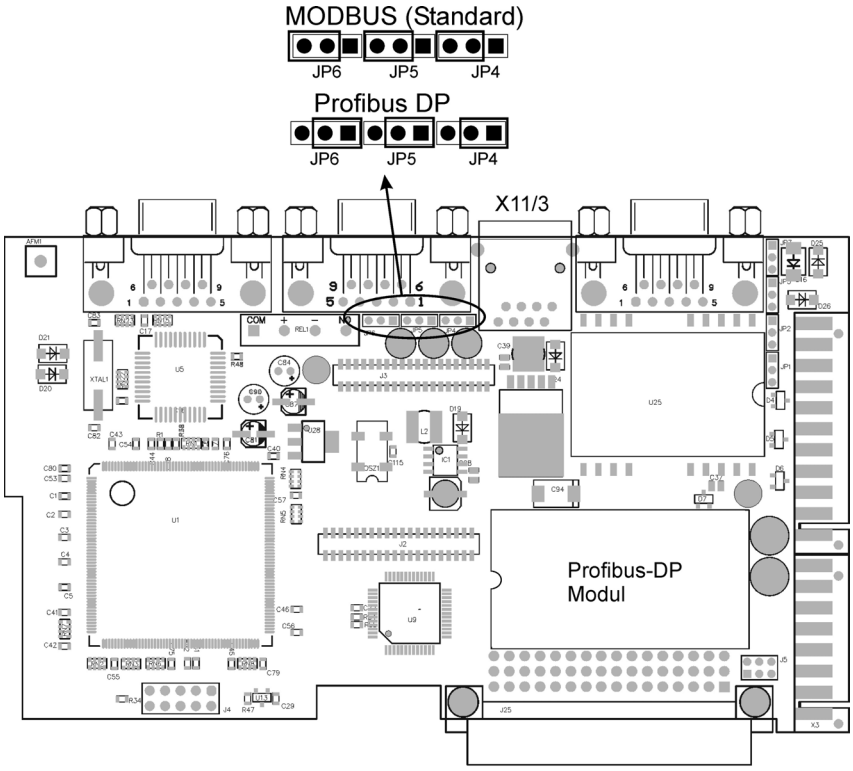

PMCprimo board

11.1.5.3 Replacing the buffer battery

The buffer battery has to be replaced when “**BATT**” appears in the display. With present 24 V supply voltage, the buffer memory remains intact.

Battery type: CR1225

Procedure:

1. Remove all connectors.
2. Unscrew both M3 screws.
3. Remove the PMCprimo board.
4. Connect the 24 V voltage supply (X10, pin 2+3)
5. Replace battery, observe polarity!
6. Disconnect 24 V voltage supply.
7. Reinstall the PMCprimo board, and screw both M3 screws.
8. Connect all connectors.
9. Check: The display “**BATT**” expires and shows the actual status of the control.

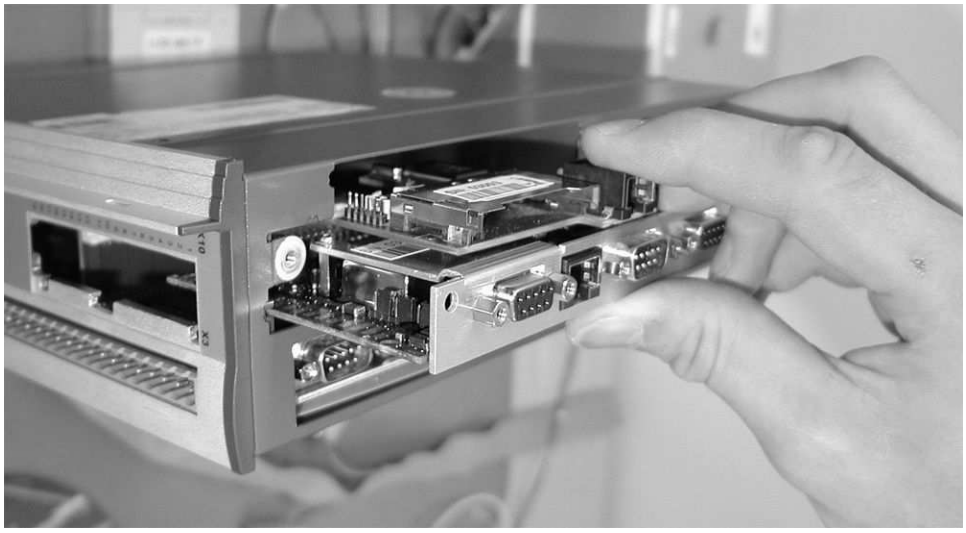

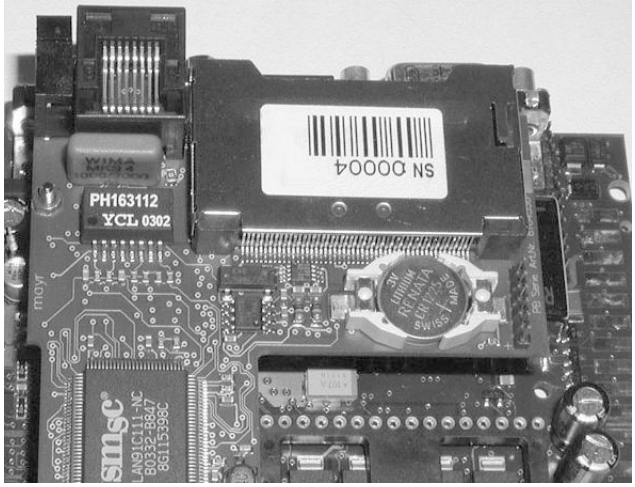

12 Appendix

12.1 Transport, storage, maintenance, disposal

Transport:
- only by qualified personnel
- only in the manufacturer's original recyclable packaging
- avoid shocks
- temperature -25 to +70°C, max. rate of change 20°C / hour
- humidity max. 95% relative humidity, no condensation
- The servo amplifiers contain electrostatically sensitive components, that can be damaged by incorrect handling. Discharge yourself before touching the servo amplifier. Avoid contact with highly insulating materials, such as artificial fabrics and plastic films. Place the servo amplifier on a conductive surface.
- if the packaging is damaged, check the unit for visible damage. In such an event, inform the shipper and the manufacturer.

Packaging:
- recyclable cardboard with inserts
- dimensions : (HxWxD) 115x365x275mm
- labeling instrument label on outside of box

Storage:
- only in the manufacturer's original recyclable packaging
- the servo amplifiers contain electrostatically sensitive components which can be damaged by incorrect handling. Discharge yourself before touching the servo amplifier. Avoid contact with highly insulating materials (artificial fabrics, plastic films etc.). Place the servo amplifier on a conductive surface.
- max. stacking height 8 cartons
- storage temperature -25 to +55°C, max. rate of change 20°C / hour
- humidity 5 ... 95% relative humidity, no condensation
- storage duration < 1 year without restriction
  > 1 year: capacitors must be re-formed before setting up and operating the servo amplifier. To do this, remove all electrical connections and apply single-phase 230V AC for about 30 minutes to the terminals L1 / L2.

Maintenance:
- the instruments do not require any maintenance
- opening the instruments invalidates the warranty

Cleaning:
- if the casing is dirty: clean with isopropanol or similar do not immerse or spray
- if there is dirt inside the unit: must be cleaned by the manufacturer
- dirty protective grill on fan: clean with a dry brush

Disposal :
- you can dismantle the servo amplifier into its principal components by unscrewing it (aluminum heat sink, steel housing sections, electronics boards)
- disposal should be carried out by a certified disposal company. We can give you suitable addresses on request.

12.2 Finding and removing faults

The table below should be regarded as a “First-aid” box. There may be a wide variety of reasons for the fault, depending on the conditions in your installation.
In multi-axis systems there may be further hidden causes of a fault.
Our customer service can give you further assistance with problems.

Fault	Possible causes	Measures
HMI Message: Communication fault	— wrong cable used — cable plugged into wrong position on servo amplifier or PC — wrong PC interface selected	— use null-modem cable — plug cable into the correct sockets on the servo amplifier and PC — select correct interface
F01 message: Heat sink temperature	— permissible heat sink temperature exceeded	— improve ventilation
F02 message: Overvoltage	— regen power is insufficient. Regen power limit was reached and the regen resistor was switched off. This causes excessive voltage in the DC bus link circuit. — supply voltage too high	—reduce the RAMP braking time. Use an external regen resistor with a higher power rating and adjust the regen power parameter — use a supply transformer
F04 message: Feedback Unit	— feedback connector not properly inserted — feedback cable is broken, crushed, or otherwise damaged — feedback unit is damaged or wrongly configured	— check connectors — check cables — check feedback unit and settings
F05 message: Undervoltage	— supply voltage is not present, or too low when the servo amplifier is enabled	— only ENABLE the servo amplifier when the electrical supply voltage has been switched on delay > 500 msec
F06 message: Motor temperature	— motor thermostat has been activated — feedback connector is loose, or a break in the feedback cable	— wait till motor has cooled down, then check why it became so hot. — screw connector up tight, or use new feedback cable
F07 message: Aux. voltage	— the aux. voltage produced by the servo amplifier is incorrect	— return the servo amplifier to the manufacturer for repair
F08 message: Overspeed	— motor phases swapped — feedback device set up incorrectly	— correct motor phase sequence — set up the correct offset
F09 message: EEPROM	— checksum error	— save data to EEPROM again to force a new calculation

F11 message: brake	— short-circuit in the supply cable for the motor-holding brake — motor-holding brake is faulty — fault in brake cable — no brake connected, although the brake parameter is set to WITH	— remove the short-circuit — replace motor — check shielding of brake cable — set brake parameter to “WITHOUT”
F13 message: Internal temp.	— permissible internal temperature has been exceeded	— improve ventilation
F14 message: Output stage fault	— motor cable has a short-circuit or earth/ground short — motor has short-circuit or earth/ground short — output module is overheated — output stage is faulty — short-circuit or short to ground in the external regen resistor	— replace cable — replace motor — improve ventilation — return the servo amplifier to the manufacturer for repair — remove short-circuit / ground short
F16 message: Mains BTB/RTO	— enable was applied, although the supply voltage was not present. — at least 2 supply phases missed	— only ENABLE the servo amplifier when the electrical supply voltage has been switched on — check the electrical supply
F17 message: A/D converter	— error in the analog-digital conversion, usually caused by EMC interference	— reduce EMC interference check shielding and grounding
F25 message: Commutatiion error	— wrong cable used — offset is too large — wake & shake missed	— check cable — check resolver pole number (RESPOLES), motor pole number (MPOLES) and offset (MPHASE) — execute wake & shake
F27 message: error AS	— -AS- enable AND HW enable have been set at the same time	— check programming and wiring of the PLC / control system
Motor does not rotate	— servo amplifier not enabled — software enable not set — break in setpoint cable — motor phases swapped — brake not released — drive is mechanically blocked — motor pole no. set incorrectly — feedback set up incorrectly	— apply ENABLE signal — set software enable — check setpoint cable — correct motor phase sequence — check brake control — check mechanism — set motor pole no — set up feedback correctly
Motor oscillates	— gain is too high (speed controller) — feedback cable shielding broken — AGND not wired up	— reduce Kp (speed controller) — replace feedback cable — join AGND to CNC-GND
Drive reports following error	— I_{rms} or I_{peak} set too low — accel/decel ramp is too long	— increase I_{rms} or I_{peak} (keep within motor ratings!) — shorten ramp +/-
Motor overheating	— I_{rms}/I_{peak} is set too high	— reduce I_{rms}/I_{peak}

Drive too soft	— Kp (speed controller) too low — Tn (speed controller) too high — ARLPF / ARHPF too high — ARLP2 too high	— increase Kp (speed controller) — use motor default value for Tn (speed controller) — reduce ARLPF / ARHPF — reduce ARLP2
Drive runs roughly	— Kp (speed controller) too high — Tn (speed controller) too low — ARLPF / ARHPF too low — ARLP2 too low	— reduce Kp (speed controller) — use motor default value for Tn (speed controller) — increase ARLPF / ARHPF — increase ARLP2
Axis drifts atsetpoint = 0V	— offset not correctly adjusted for analog setpoint provision — AGND not joined to the controller-GND of the controls	— adjust offset (analog I/O) — join AGND and controller-GND
n12 message: Motor default values loaded	— Motor numbers stored in the encoder and amplifier do not match the parameters that have been set	— default values for the motor have been loaded, SAVE automatically stores the motor number in the EEPROM
n14 message: SinCos feedback	— SinCos commutation (wake&shake) not completed	— ENABLE the amplifier

12.3 Glossary

C	Clock	Clock signal
	Common-mode voltage	The maximum amplitude of a disturbance (on both inputs) which a differential input can eliminate
	CONNECT modules	Modules built into the servo amplifier, with integrated position control, that provide special versions of the interface for the connection to the higher-level control.
	Counts	Internal count pulses, 1 pulse = $1/2^{20}$ turn-1
	Continuous power of regen circuit	Mean power that can be dissipated in the regen circuit
	Current controller	Regulates the difference between the current setpoint and the actual value to 0 Output : power output voltage
	counts	interne Zählimpulse, 1 Impuls=$1/2^{20}$ $Umdr^{-1}$
D	DC bus link	Rectified and smoothed power voltage
	Disable	Removal of the ENABLE signal (0V or open)
E	Earth short	electrical connection between a phase and the protective earth (PE)
	ENABLE	Enable signal for the servo amplifier (+24V)
F	Fieldbus interface	CANopen, PROFIBUS, SERCOS etc.
	Final speed (limit speed)	Maximum value for the speed normalization at ±10V
G	GRAY-code	Special format for representing binary numbers
H	Holding brake	Brake in the motor, that can only be used when the motor is at standstill
I	I^2t threshold	Monitoring of the r.m.s. current that is actually required
	Input drift	Temperature and age-dependent alteration of an analog input
	Incremental encoder interface	Position signaling by 2 signals with 90° phase difference (i.e. in quadrature), is not an absolute position output
	Ipeak, peak current	The effective value of the peak current
	Irms, effective current	The r.m.s. value of the continuous current

K	Kp, P-gain	Proportional gain of a control loop
L	Limit speed (final speed)	Maximum value for speed normalization at ±10V
	Limit switch	Switch limiting the traverse path of the machine; implemented as n.c. (break) contact
M	Machine	The complete assembly of all connected parts or devices, of which at least one is movable
	Motion block	Data packet with all the position control parameters which are required for a motion task
	Multi-axis system	Machine with several independently driven axes
N	Natural convection	Free movement of air for cooling
O	Optocoupler	Optical connection between two electrically independent systems
P	P-controller	Control loop with purely proportional behavior
	Phase shift	Compensation for the lag between the electro-magnetic and magnetic fields in the motor
	PI-controller	Control loop with proportional and differential behavior
	Position controller	Regulates the difference between the position setpoint and the actual position to 0 Output: speed setpoint
	Potential isolation	electrically decoupled, electrical isolation
	Power contactor	System protection device with phase monitoring
	Pulse power of the regen circuit	Maximum power which can be dissipated in the regen circuit
R	regen circuit	Converts superfluous energy fed back by the motor during braking (regenerated energy) into heat.
	Reset	New start of the microprocessor
	Resolver/digital converter	Conversion of the analog resolver signals into digital information
	Reversing mode	Operation with a periodic change of direction
	Ring core	Ferrite rings for interference suppression
	ROD-interface	Incremental position output
S	Servo amplifier	Control device for regulating the speed, torque and position of a servomotor
	Setpoint ramps	Limits for the rate of change of the speed setpoint
	Short-circuit	here: electrically conductive connection between two phases
	Speed controller	Regulates the difference between the speed setpoint and the actual value to 0 Output : current setpoint
	SSI-interface	Cyclically absolute, serial position output
	Supply filter	Device to divert interference on the power supply cables to PET
T	Tachometer voltage	Voltage proportional to the actual speed
	Thermostat (contact)	Temperature-sensitive switch built into the motor winding
	Tn, I-integration time	Integral component of a control loop
Z	Zero pulse	Output once per turn from incremental encoders, used to zero the machine

12.4 Index